POWELL

Powered by Safety®

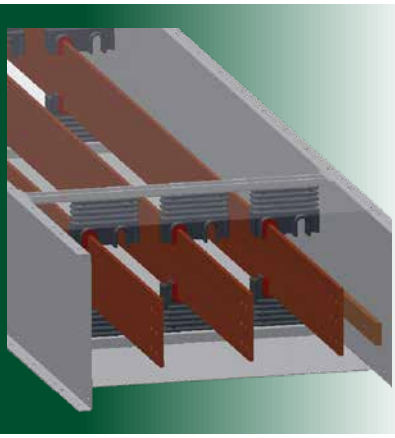

01.4IB.80000E
Non Segregated Phase Bus Duct

1058V to 15kV, 1200A to 5000A

Contact Information

Powell Electrical Systems, Inc.
powellind.com
info@powellind.com

Service Division
PO Box 12818
Houston, Texas 77217-2818

Tel: 713.944.6900
Fax: 713.948.4569

Signal Words

As stated in ANSI Z535.4-2007, the signal word is a word that calls attention to the safety sign and designates a degree or level of hazard seriousness. The signal words for product safety signs are **"Danger"**, **"Warning"**, **"Caution"** and **"Notice"**. These words are defined as:

DANGER

DANGER indicates an imminently hazardous situation which, if not avoided, will result in death or serious injury.

WARNING

WARNING indicates a potentially hazardous situation which, if not avoided, could result in death or serious injury.

CAUTION

CAUTION, used with the safety alert symbol, indicates a hazardous situation which, if not avoided, could result in minor or moderate injury.

CAUTION

CAUTION, used without the safety alert symbol, is used to address practices not related to personal injury.

NOTICE

NOTICE is used to address practices not related to personal injury.

Qualified Person

For the purposes of this manual, a qualified person, as stated in NFPA 70E®, is one who has skills and knowledge related to the construction and operation of the electrical equipment and installations and has received safety training to recognize and avoid the hazards involved. In addition to the above qualifications, one must also be:

1. trained and authorized to energize, deenergize, clear, ground, and tag circuits and equipment in accordance with established safety practices.
2. trained in the proper care and use of personal protective equipment (PPE) such as rubber gloves, hard hat, safety glasses or face shields, flash clothing, etc., in accordance with established safety practices.
3. trained in rendering first aid if necessary.

This page is left blank intentionally.

Contents

Figures

Tables

Ch 1 General Information

WARNING

The equipment described in this document may contain high voltages and currents which can cause death or serious injury.

The equipment is designed for use, installation, and maintenance by knowledgeable users of such equipment having experience and training in the field of high voltage electricity. This document and all other documentation shall be fully read, understood, and all warnings and cautions shall be abided by. If there are any discrepancies or questions, the user shall contact Powell immediately at 1.800.480.7273.

WARNING

Prior to adjustments, servicing, maintenance, or any act requiring the operator to make physical contact with the equipment, the power source must be disconnected and the equipment grounded. Failure to do so may result in death or serious injury.

NOTICE

The information in this instruction bulletin is not intended to explain all details or variations of the Powell equipment, nor to provide for every possible contingency or hazard to be met in connection with installation, testing, operation, and maintenance of the equipment. For additional information and instructions for particular problems, which are not presented sufficiently for the user's purposes, contact Powell at 1.800.480.7273.

NOTICE

Powell reserves the right to discontinue and to change specifications at any time without incurring any obligation to incorporate new features in products previously sold.

A. Scope

The information in this instruction bulletin describes Powell Non Segregated Phase Bus Duct.

- 1058V, 1200A - 5000A, 80kA
- 5kV & 15kV, 1200A - 5000A, 63kA

B. Purpose

The information in this instruction bulletin is intended to provide information required to properly operate and maintain the nonsegregated-phase bus assembly described in *Ch 1 General Information, A. Scope*.

This instruction bulletin provides:

1. Safety guidelines
2. General descriptions of the operation and maintenance of the nonsegregated-phase bus assembly
3. Instructions for installation and placing the bus assembly into service
4. Instructions for part replacement
5. Information for ordering renewal parts
6. Illustrations, photographs, and description of the bus assembly

The illustrations contained in this document may not represent the exact construction details of each particular type of nonsegregated-phase bus assembly. The illustrations in this document are provided as general information to aid in showing component locations only.

All illustrations and photos are shown using deenergized equipment.

⚠ WARNING

Follow the appropriate safety precautions while handling any of the equipment. Failure to do so may result in death or serious injury.

To the extent required, the products described herein meet the applicable ANSI, IEEE, and NEMA Standards; however, no such assurance is given with respect to local codes and ordinances which may vary greatly.

C. Instruction Bulletins Available Electronically

NOTICE

Changes to the instruction bulletin may be implemented at any time and without notice. Go to powellind.com to ensure use of the current instruction bulletin for Powell equipment.

For more information visit *powellind.com*.
To contact the Powell Service Division call 1.800.480.7273 or 713.944.6900, or email *info@powellservice.com*.

For specific questions or comments pertaining to this instruction bulletin email *documents@powellind.com* with the IB number in the subject line.

Ch 2 Safety

A. Safe Work Condition

The information in Section A is quoted from *NFPA 70E 2012 - Article 120, 120.1 Establishing an Electrically Safe Work Condition.*

120.1 Process of Achieving an Electrically Safe Work Condition

1. Determine all possible sources of electrical supply to the specific equipment. Check applicable up-to-date drawings, diagrams, and identification tags.

2. After properly interrupting the load current, OPEN the disconnecting device(s) for each source.

3. Wherever possible, visually verify that all blades of the disconnecting devices are fully OPEN or that drawout type circuit breakers are withdrawn to the fully disconnected position.

4. Apply lockout/tagout devices in accordance with a documented and established policy.

5. Use an adequately rated voltage detector to test each phase conductor or circuit part to verify they are deenergized. Test each phase conductor or circuit part both phase-to-phase, and phase-to-ground. Before and after each test, determine that the voltage detector is operating satisfactorily.

   Informational Note: See ANSI/ISA-61010-1 (82.02.01)/UL 61010-1, *Safety Requirements for Electrical Equipment for Measurement, Control, and Laboratory Use - Part 1: General Requirements*, for rating and design requirements for voltage measurement and test instruments intended for use on electrical systems 1000V and below.

6. Where the possibility of induced voltages or stored electrical energy exists, ground the phase conductors or circuit parts before touching them. Where it could be reasonably anticipated that the conductors or circuit parts being deenergized could contact other exposed energized conductors or circuit parts, apply ground connecting devices rated for the available fault duty.

B. Safety Guidelines

Study this instruction bulletin and all other associated documentation before uncrating the equipment.

Each user has the responsibility to instruct and supervise all personnel associated with usage, installation, operation, and maintenance of this equipment on all safety procedures.

Furthermore, each user has the responsibility of establishing a safety program for each type of equipment encountered.

The safety rules in this instruction bulletin are not intended to be a complete safety program. The rules are intended to cover only some of the important aspects of personnel safety related to non segregated phase bus duct.

C. General

1. Only supervised and qualified personnel trained in the usage, installation, operation, and maintenance of the bus assembly shall be allowed to work on this equipment. It is mandatory that this instruction bulletin, any supplements, and service advisories be studied, understood, and followed.

2. Maintenance programs must be consistent with both customer experience and manufacturer's recommendations, including service advisories and instruction bulletin(s). A well planned and executed routine maintenance program is essential for bus duct's reliability and safety.

3. Service conditions and applications shall also be considered in the development of safety programs. Variables include ambient temperature; humidity; actual continuous current; thermal cycling; and any adverse local conditions including excessive dust, ash, corrosive atmosphere, vermin and insect infestations.

D. Specific

1. **DO NOT WORK ON ENERGIZED BUS ASSEMBLIES.**

2. **DO NOT climb on, walk on or sit on the bus assembly. It is NOT designed to support the weight of a person.**

3. **DO NOT use the bus assembly for support of other equipment. It is not designed to support the extra weight.**

4. **For the safety of personnel performing maintenance operations on the bus assembly or on connected equipment, all components should be disconnected by means of a visible break and securely grounded.**

5. See additional safety precautions in *Ch 4 Installation*.

E. Safety Labels

The equipment described in this document has **DANGER**, **WARNING, CAUTION,** and instruction labels attached to various locations. All equipment **DANGER**, **WARNING, CAUTION,** and instruction labels shall be observed when the circuit breaker is handled, operated, or maintained.

NOTICE

Warning and Caution labels are located in various places. Do not remove or deface any of these warning/caution labels.

Ch 3 Equipment Description

NOTICE

Powell is committed to continuous product improvement.

It is possible that improvements occurred between revisions to this document and therefore, may not be described in these instructions. If the equipment does not resemble the photographs and descriptions contained herein, contact Powell before attempting to perform any actions.

The bus assemblies covered by these instructions are nonsegregated-phase bus designed, built and tested in accordance with ANSI/IEEE Standard C37.23, *IEEE Standard for Metal-Enclosed Bus*. This standard defines metal-enclosed bus as "An assembly of conductors with associated connection joints and insulating supports within a grounded metal enclosure. The conductors shall be rigid bus bar, but may include flexible connectors." It further defines nonsegregated phase bus as "One in which all phase conductors are in a common metal enclosure without barriers between the phases."

Bus assemblies are normally used to connect two pieces of electrical power equipment, such as two units of metal-enclosed switchgear, a transformer and a switchgear unit, a large rotating machine and a switchgear unit, or a large rotating machine and a transformer. The bus assembly may be located either indoors or outdoors, or the bus assembly may pass from indoors to outdoors one or more times.

Standard ratings of bus assemblies are listed in *Table A, Standard Bus Assembly Ratings*. Other ratings are available when required.

The standard enclosure of Powell bus assemblies are aluminum. The sides and bottom can be steel with the top being aluminum if the customer specifies and the continuous current rating is less than 3000A.

Table A Standard Bus Assembly Ratings

Rated Voltage kV	BIL kV	60Hz Hipot kV	dc Hipot kV*	Continuous Current Amperes
1.058	---	2.2	3.1	1200, 1600, 2000, 2500, 3200, 4000, 5000
4.76	60	19.0	27.0	1200, 2000, 3000, 4000, 5000
15.0	95	36.0	50.0	1200, 2000, 3000, 4000, 5000

* *The presence of the column headed "dc Hipot" does not imply any requirement for a dc withstand test on ac equipment. This column is given as a reference only for those using dc tests and represents values believed to be appropriate and approximately equivalent to the corresponding power frequency withstand test values specified for each class of bus.*

The conductors in Powell bus assemblies are usually solid rectangular copper bars with full rounded edges, although in higher ratings round or square tubes may be used. At connections to apparatus bushings, flexible connectors are normally used to avoid placing undue strain on the bushings. For bus assemblies rated 4.76kV and above, the conductors are insulated. The conductors in bus assemblies rated 1058V are normally uninsulated, but may be insulated on request.

The conductors in Powell bus assemblies are usually supported by molded glass-reinforced polyester or epoxy supports. See *Figure 1* for a cross section of this style of bus. Refer to the drawings provided with the bus assembly for detailed cross sections, including dimensions.

Space heaters are furnished in all outdoor bus assemblies. These heaters are designed to minimize condensation in the bus assembly by keeping the air inside the bus assembly at a temperature above the dew point. Special heaters designed to operate at a low surface temperature are normally furnished to insure a long life for the heater elements. These heaters may be furnished with thermostatic control on request.

Figure 1 Typical Cross Section Bus Assemblies

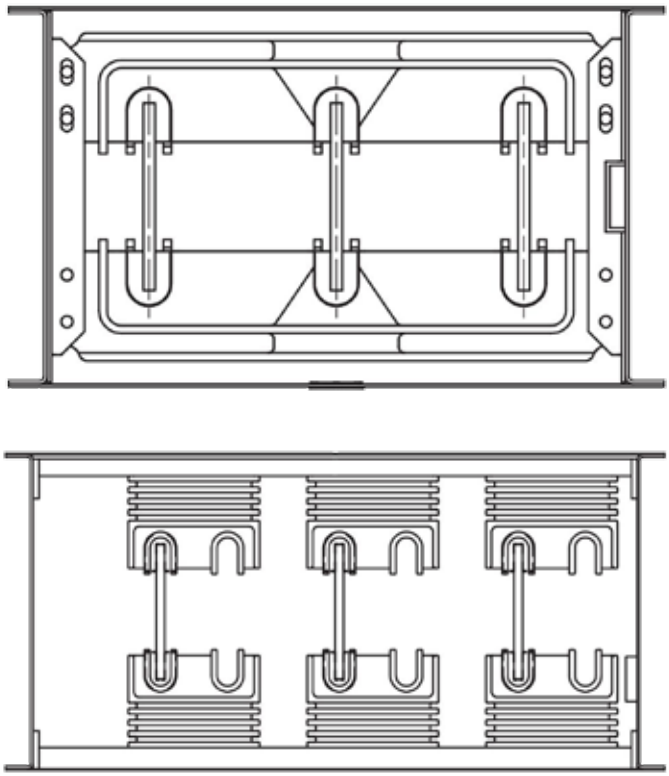

In addition to the items described in the definition of nonsegregated-phase bus, bus assemblies frequently include other special features such as vapor barriers, fire barriers, or termination sections to match switchgear, transformers, or rotating machines. The bus assembly or the termination section may include such items as removable links in the conductors, current transformers, voltage transformers, surge arresters or surge capacitors, if required by the installation.

Bus assemblies are not self-supporting and must be supported at installation. Indoor bus assemblies are normally supported by hanging from the ceiling, supported from floors or walls or from other pieces of equipment, such as switchgear units. Outdoor bus assemblies are normally supported from the ground. Supports for bus sections are normally furnished by the user or the installing contractor. See *Ch 4 Installation* for further information on bus assembly supports.

Ch 4 Installation

A. Receiving

When the bus assembly is received, unpack it sufficiently to inspect it for concealed damage and to determine that the shipment is complete and correct. If damage is found or suspected, file claims as soon as possible with the transportation company and notify the nearest Powell representative.

B. Unpacking

1. Carefully unpack all sections of the bus assembly. To avoid damage to the bus assembly, band cutters should be used on all banding securing the packages and nail pullers should be used for unpacking wooden crates.
2. Carefully remove any support blocks or other temporary fasteners which may have been used for shipping.
3. If the bus assembly is not to be installed immediately, save all packing and wrapping materials for reuse while the bus assembly is in storage.

C. Handling

To help avoid personal injury and equipment damage during handling, and to facilitate moving the bus assembly sections and fittings at the job site, follow these guidelines:

1. Assess the weight of the bus prior to handling. See the "section view" of the Powell drawing for approximate weight per foot. To avoid personal injury, do not attempt to lift, carry, or otherwise move bus assembly sections by hand. Use appropriate mechanical means to handle bus assemblies. Be sure that the handling equipment used is capable of safely handling the bus assembly sections.
2. Handle bus assembly sections with care to avoid damage to internal components. Avoid subjecting bus assembly sections to twisting, denting, impact, and any rough handling. Avoid damaging to protruding objects such as flanges, drain and vent fittings, heater boxes, etc.
3. When setting bus assembly sections on the ground or on a floor, the main body of the enclosure should be set on a support to protect flanges and other protruding objects. A short length of 2" x 4" or 4" x 4" lumber makes a good support.
4. Do not drag bus assembly sections across the floor or the ground.
5. Do not use bus bar ends for lifting bus assembly sections or fittings. Lift only the bus assembly enclosure, using support means such as slings or lift truck forks which extend under the full width of the enclosure.
6. Keep the bus assembly enclosure level when lifting. Unsecured bus bar may slide out of its insulating sleeve or supports if the enclosure is tilted during lifting.
7. If a section of bus assembly must be lifted vertically, be sure that the bus bars are secured to the housing to prevent sliding.

8. Platform dollies provide a simple method of moving bus assemblies on one floor, level if there is little or no incline. Balance the load carefully and secure it to the dolly.
9. If a crane is used to install bus assembly, use nylon straps and distribute or balance the weight of each lift. If cables are used, spreaders should be used to avoid damage to the metal housing. Lifting straps and cables must have sufficient strength to hold the load of the section to be lifted.
10. If a fork or similar hoist is used, properly position the bus assembly enclosure on the forks to distribute its weight. Secure the load to the forks while lifting.

Figure 2 Unloading and Maneuvering Bus Section

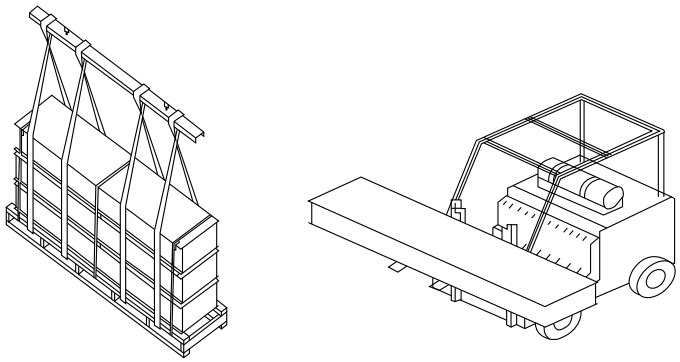

D. Storage

Shipping and storage of electrical equipment requires measures to prevent the deterioration of the apparatus over a long unused period. The mechanical and dielectric integrity must be protected. Electrical equipment is designed for use in a variety of environments. When the equipment is in transit and storage, these design considerations are not fully functional. In general, the following measures must be considered.

1. Equipment designed for indoor installation must be stored indoors in a climate controlled environment to prevent condensation of moisture. Exposure to rain and the elements, even for a short period, can permanently damage the equipment. Space heaters within the equipment should be energized. Humidity controlling desiccant materials should be utilized when space heaters are not provided or cannot be energized. The temperature should be kept above 33°F/1°C and below 140°F/60°C. The relative humidity should be kept below 60% or a dew point of 15°C/59°F. The equipment should be stored in such a manner as to leave all doors and panels accessible for inspection. The equipment must be inspected on a routine basis to assure operational integrity.
2. Equipment designed for outdoor exposure may be stored either in indoor or outdoor storage locations. The equipment must be protected from airborne external contaminates if stored outdoors. Outdoor storage will also require additional care to maintain temporary covers over the openings and shipping splits. The equipment must be provided with control power to facilitate the energization of space heaters, as well as other temperature and humidity controlling equipment. The temperature should be kept above freezing (>33°F/1°C) and below (<140°F/60°C). The relative humidity should be kept below 60% or a dew point of 15°C/59°F. The equipment should be stored in such a manner as to leave all doors and panels accessible for inspection. The equipment must be inspected on a routine basis to assure its integrity.

NOTICE

Failure to store and protect bus components properly can cause serious damage and will void the warranty.

E. Assembly Drawings

A set of specific, detailed assembly drawings is provided for each bus system. An understanding of the organization of these drawings is the key to ensuring a fast, trouble-free installation. The bus assembly drawings along with the bills of material are the primary drawings which reference and coordinate all the other drawings and procedures. The typical drawing package provided from Powell will consist of the following drawings along with various other drawings showing project specific requirements for connecting sections of bus together:

1. Master Layout - shows the routing of all bus duct runs within a specific project, along with structural steel support locations or recommended structural steel support locations depending on the project scope. The bill of material on this drawing will identify the bus runs and structural steel support.
2. Bus Run Layout - shows the particular assembly of a bus duct run identifying the bus duct sections and their location within the bus run.
3. Termination Drawings - shows the bus duct connection details to the termination equipment (i.e. switchgear, transformer, etc.) along with the project requirements for insulating the connection.
4. General Bus Duct Drawings - shows the specific requirements of the bus duct run including electrical specifications, type of hardware to be used, etc.

F. Part Identification

Each section of the bus is uniquely identified on the assembly drawing by a section tag number. This identification is also marked on each bus section. Identifying and locating the sections on the corresponding assembly drawings will assist in determining the sequence of installation of the bus equipment in the field.

G. Structural Steel Support Installation

Bus ducts are not self-supporting and must be properly supported for trouble-free service. Extra supports are used at all corners. Powell provides details for the support locations shown on the master layout drawing. If the bus duct steel support is Powell's responsibility, a set of steel support assembly drawing will be provided. These drawings explain the details about the steel support structure and provide a guide through all steps of the installation process.

Installation of the steel support structures must be done per the instructions from the master layout drawing and the support steel assembly drawings in order to support the bus correctly. All steel support structures need their foundations completed prior to the installation and must be positioned and installed with elevations as stated on the master layout drawing before continuing with the bus duct installation process.

H. Alignment of Apparatus

Before installing a run of bus assemblies, carefully check the location of the apparatus to be connected. The relative location of the two ends of the bus assembly must be as shown on the layout drawing for proper connection.

NOTICE

The entire run of bus duct should be installed and adjusted at all terminating equipment before final torquing of connecting bolts.

For a typical bus assembly of about 20 feet, the relative locations of the two end connections should not deviate from the layout drawing by more than ½" total. Location of walls which are penetrated by a bus assembly should also be checked. The center lines of the wall cutout should not deviate from the center lines of the bus assembly by more than ½", and the location of the wall along the length of the bus assembly should not deviate from its position on the layout drawing by more than ¼ of the thickness of the wall, to insure that vapor barriers fall within the thickness of the wall, where they will be effective.

If the terminal points of the bus assembly are not aligned within these limits, corrective action must be taken. If at all possible, the apparatus to which the bus assembly connects should be moved so that the alignment is within limits. If this is not possible, contact Powell with all necessary dimensions, so that corrective action can be taken.

Do not rely on flexible connectors at the terminations of a bus assembly to correct misalignment problems beyond the limits given above. Flexible connectors are furnished to limit stress on apparatus terminations caused by thermal expansion and vibration, and to correct very minor (<¼") misalignments.

Bus assemblies must have sufficient horizontal and vertical clearance from walls and ceilings to provide easy access to joints, both for original installation and for maintenance, including the possible removal of a section.

I. Installation Checklist

This checklist lists the steps necessary for installation of the bus assembly in the order in which they should be performed. More detail about many of these steps is given in subsequent sections, which should be reviewed before installation.

1. Check the material received, including loose items such as hardware, splice plates, insulating material and gaskets, against the drawings and shipping documents. Notify Powell of any discrepancies.
2. Lay out the bus assembly on the ground where it will be installed. See *Ch 4 Installation, J. Preliminary Steps* for further details.
3. Install gaskets on outdoor flanges as needed. See *Ch 4 Installation, J. Preliminary Steps* for further details.
4. Lay out the mounting supports for the bus assembly. See *Ch 4 Installation, L. Mechanical Installation and Support* for information on required supports.
5. Install the bus assembly sections. See *Ch 4 Installation, L. Mechanical Installation and Support* for additional information. Temporary support may be needed during the installation process.
6. Align the bus assembly sections and bolt the enclosures together. Be sure all outdoor sections are bolted with stainless steel hardware, and that there are gaskets at all outdoor enclosure joints.
7. Attach and adjust all bus assembly supports, leveling and plumbing the bus assembly as necessary. See *Ch 4 Installation, L. Mechanical Installation and Support* for additional information.

8. Remove the covers from the bus assembly if not previously removed.
9. Loosely connect all bus assembly joints, installing hardware, splice plates and flexible connectors as shown on the drawings. See *Ch 4 Installation, M. Connection of Bus Bars* for additional information.
10. Tighten all connections using torque values given in *Table B, Bolt Torque Values for Bus Assemblies*.
11. If bus conductors are insulated, insulate joints as necessary. See *Ch 4 Installation, N. Insulation of Bus Assembly Joints* for further information.
12. Connect space heater wiring if required. See *Ch 4 Installation, O. Final Installation Steps* for additional information.
13. Check all insulation for cleanliness. If necessary, clean with denatured alcohol.
14. Replace all covers and tighten cover bolts.

Table B Bolt Torque Values for Bus Assemblies

Bolt Size	Torque, Pound-Feet	Material
¼"-20	5 - 7	Steel Copper Aluminum Compound
⅜"-16	20 - 30	
½"-13	35 - 50	
⅝"-11	55 - 70	

J. Preliminary Steps

Before installing any section of the bus assembly, the entire assembly should be laid out on the ground in the same position as the final assembly. Powell bus assemblies are marked with alignment numbers/tags to allow for rapid matching and aligning of the bus assembly sections. See *Figure 3*. These alignment numbers are marked on the Powell drawings to show how and where each piece of bus assembly should be located. Refer to the Powell drawings for the proper placement of bus assembly.

After the assembly has been laid out on the ground the access covers should be removed. The cover provides needed support for handling some larger bus, and should not be removed before this stage of installation.

Install gaskets on one flange of all mating joints in the outdoor section of the bus assembly, including the flange on the cover. This gasket is not installed in the factory in order to prevent damage during shipping and handling.

K. Bar Bus Enclosure Installation

It is recommended that the erection of the duct begins with one termination section and proceed forward. Each section must be properly supported during assembly and attached to the next section by "finger tightening" the bolts on the splice plates.

Wall penetration sections containing fire barriers must be positioned so that the barrier is within the thickness of the wall through which it passes and may be held in place with temporary support. Wall plate installation should not be completed at this time.

When the bus duct housing is in position it is secured to the supporting steel structure with hold down clips and the support steel hardware is tightened according to *Table B, Bolt Torque Values for Bus Assemblies*.

Figure 3 Indoor Splice Plate Assembly (5-15kV design shown)

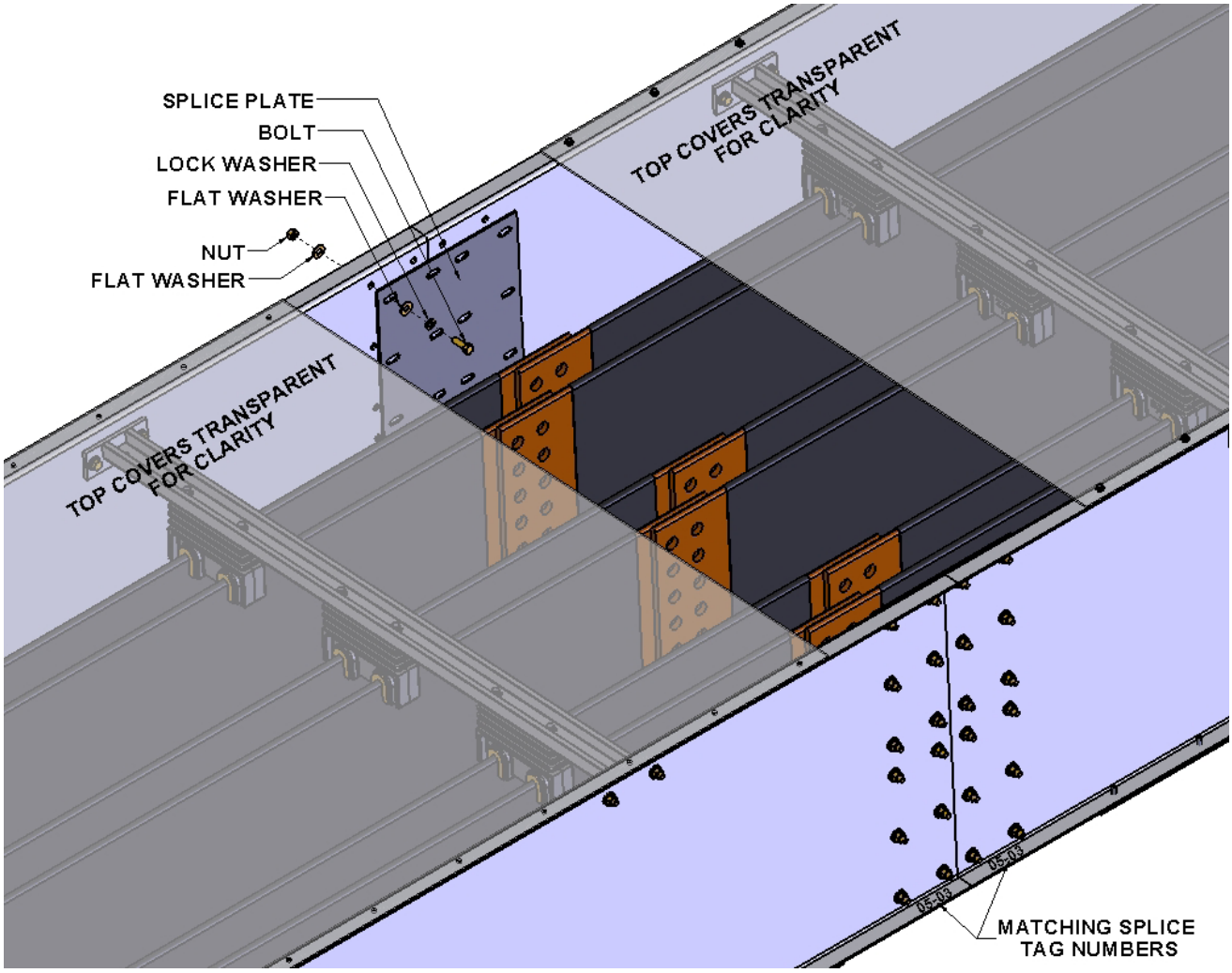

Figure 4 Outdoor Splice Plate Assembly (1058V design shown)

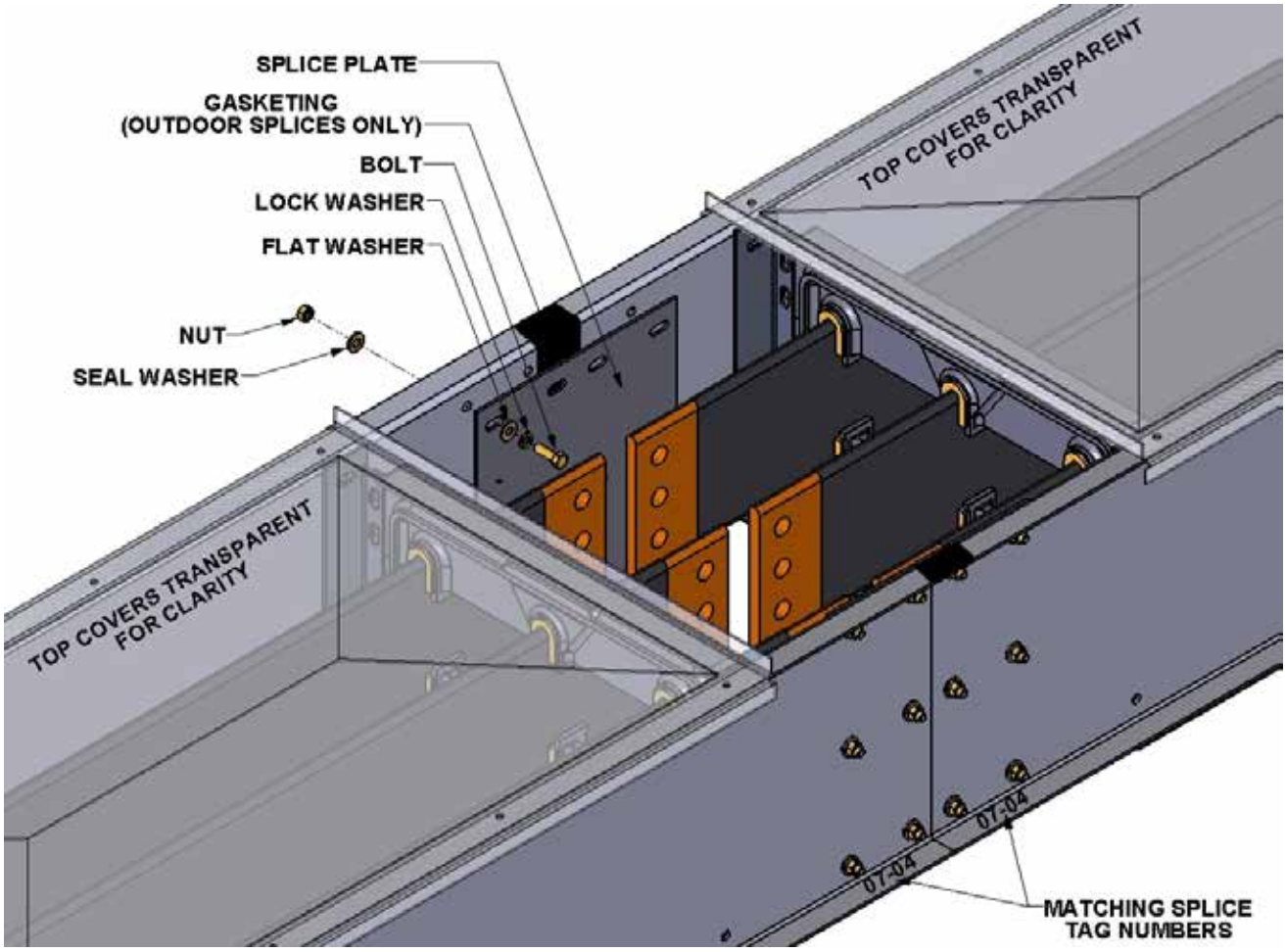

Note: *3 Phase design shown, 6 Phase design is similar.*

Figure 5 Hold Down Clip Mounting Details

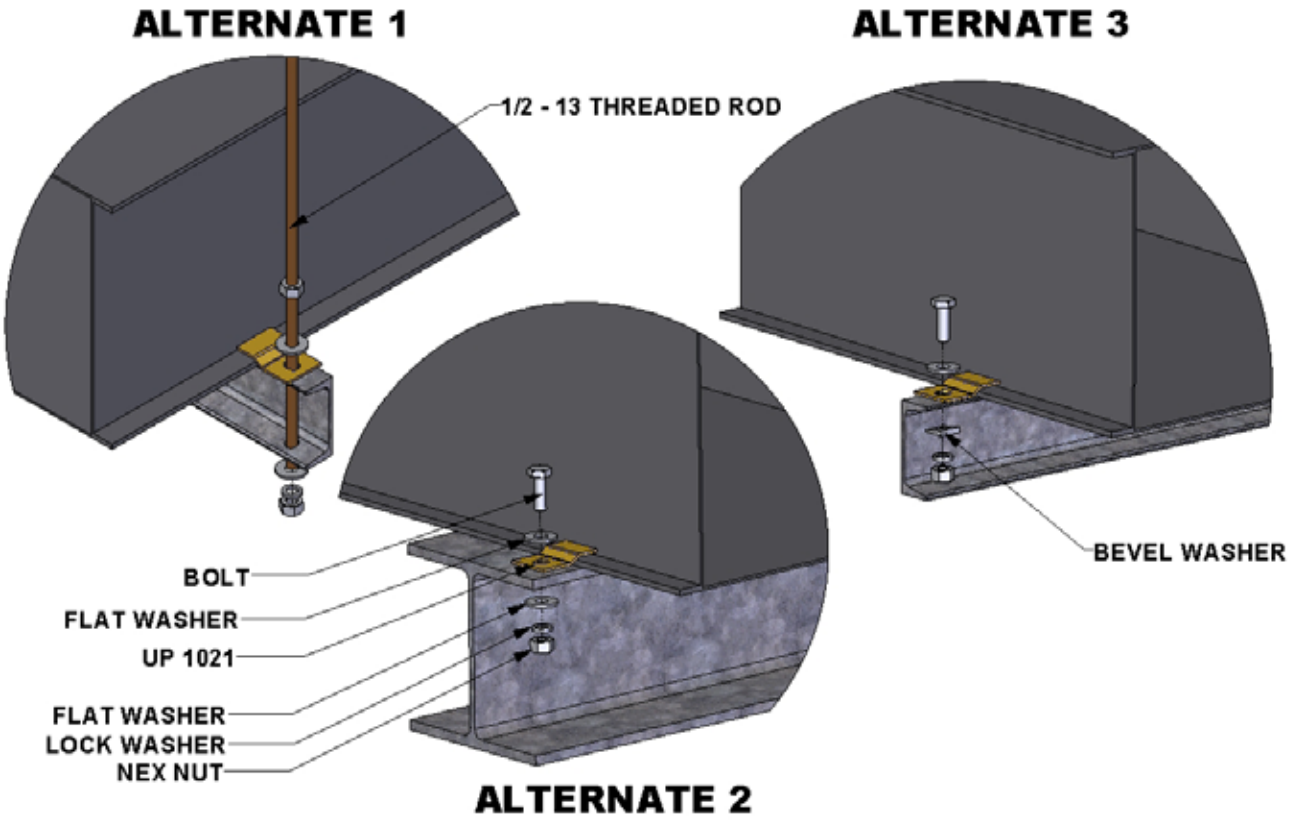

L. Mechanical Installation and Support

After the covers are removed the bus assembly should be lifted into place one section at a time. Each section should be properly supported during assembly and attached to the next piece by finger tightening the flange bolts. **Connections of bus bars should not be made at this time.**

Wall penetration sections containing fire barriers or vapor barriers must be positioned so that the barrier is within the thickness of the wall it passes through *(Figure 6)*. While the wall section may be supported temporarily by the lower part of the wall flange, do not complete the installation of the wall flange at this time.

Figure 6 Typical Bus Assembly Wall Section

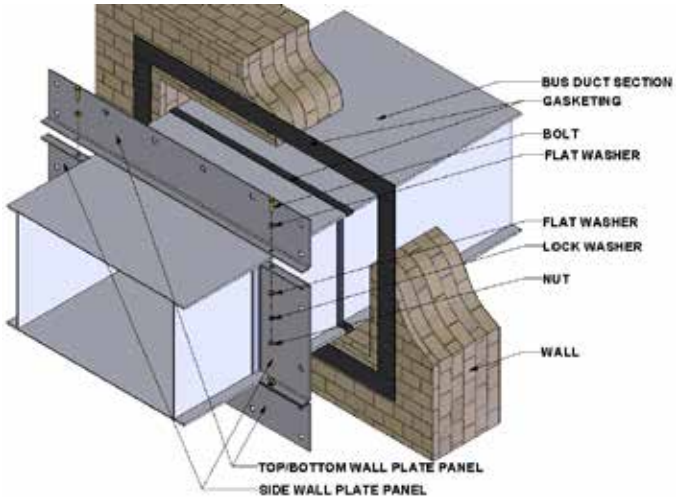

Bus assemblies are not self-supporting, and must be properly supported for trouble-free service. Some bus assemblies, such as those connecting switchgear lineups located close to each other, may be completely supported from the apparatus at the ends of the assembly. Other bus assemblies, even though receiving some support from apparatus at the ends of the assembly and from wall penetrations will require additional support.

All bus assemblies should be supported every ten feet with no more than two joints between supports. Extra supports should be used at all corners. Apparatus at the ends of bus assemblies should be checked to be sure that it can carry the weight of the attached bus assembly without difficulty. If it cannot, the assembly should be supported separately as close to the termination as possible.

Supports for indoor bus assemblies may be either from the floor or from above. Outdoor assemblies are normally supported from below. Powell bus assemblies are normally furnished with angle clips attached to the bus body for the attachment of supports. The location of these clips will show on the layout drawing, and may be adjusted to meet the user's needs upon request. Unless required by the purchase order, Powell will not supply the supports, so they must be supplied by either the user or the installing contractor. A typical design for a support from beneath the bus assembly is shown in *Figure 7* and a typical design for a hanging support is shown in *Figure 8*.

Figure 7 Typical Floor Mounted Bus Assembly Support

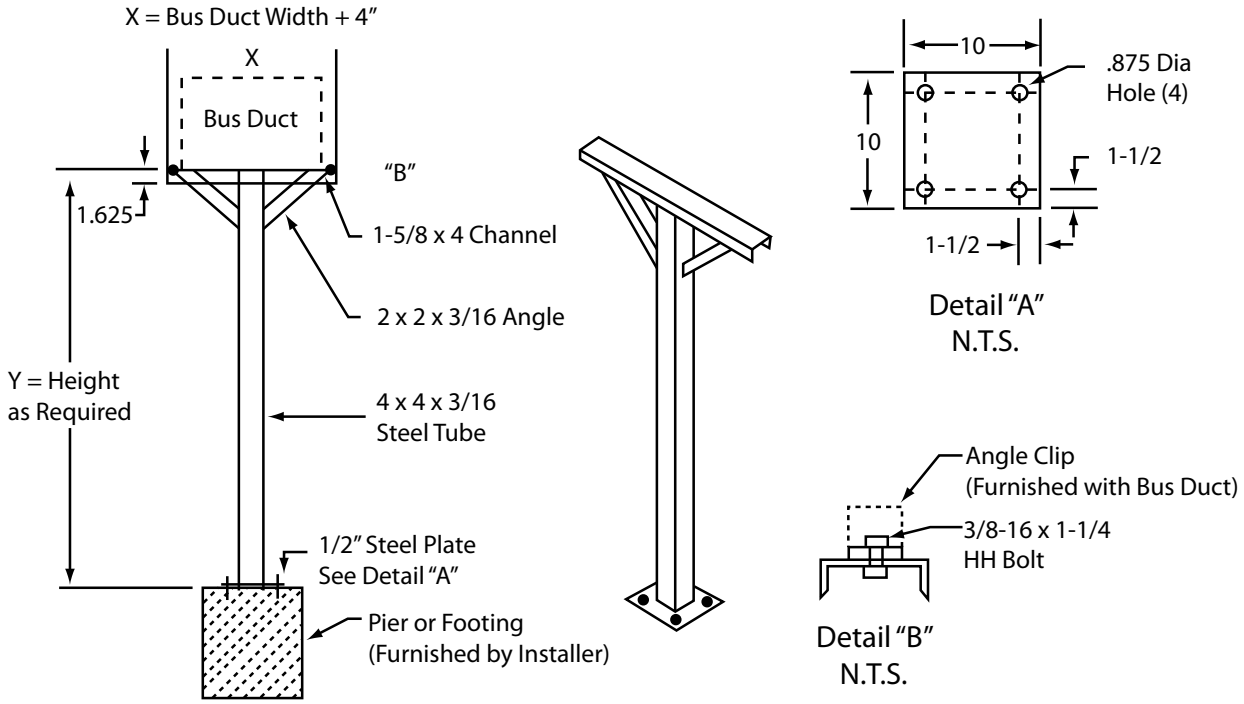

Figure 8 Typical Hanging Bus Assembly Support

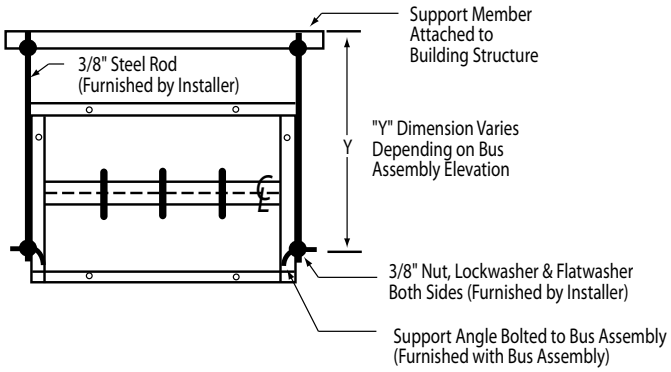

M. Connection of Bus Bars

Before beginning the assembly of bus bar connections, clean all contact surfaces and remove any contamination or corrosion. Wipe surface clean. Do not use sandpaper or any abrasive on the plated surface. Avoid handling of cleaned surface as much as possible. If a hydrocarbon-based solvent is used in the cleaning process, be sure that it does not come into contact with the bus bar insulation. These solvents may damage or destroy the insulation.

Align the bus bar ends of adjoining sections and verify proper phase alignment. After the entire assembly is properly positioned and aligned the bus bars should be loosely bolted together with the splice plates and hardware provided. To insure that the joints are made up without unnecessary strain, it may be necessary in some cases to loosen the joints and support insulators on either side of the joint being made.

Take special care with the installation of the connections to other apparatus at the ends of the bus assembly. These connections frequently make use of flexible connectors. Refer to the drawings furnished for the proper installation of the flexible connectors. Do not use these flexible connectors to correct misalignment problems. Flexible connectors are furnished to limit stress caused by thermal expansion and vibration on apparatus terminations, and to correct very minor (<¼") misalignments. If their flexing capability is used to correct installation misalignments, they cannot do the job they were designed to do.

Level and plumb the bus assembly (align vertically and horizontally) before the final tightening of all joints. After the bus assembly and bus bars are aligned, tighten all bolts in both the enclosure and the bus bar joints to the torque values given in *Table B*. Check bolt torque values on all unwrapped joints and connections. If a major deflection of bus bars is noted at the joints, recheck for proper alignment of bus assembly and bus bars before proceeding with tightening of the bus bar joints.

N. Insulation of Bus Assembly Joints

All bus assembly joints, including joints using flexible connectors, must be insulated if the bus bars in the assembly are insulated. All bus bars in an assembly rated above 1058V are insulated, but bus bars in an assembly rated below 1058V are only insulated on request.

NOTICE

Bus joints on systems requiring insulation must be taped or covered with specifically designed PVC boots. For Parts 0282A352P001 through ...P007, use 3M 130C Linerless Rubber Splicing Tape or equal. For Part 0282A3529P008 and 0282A3529P009 use 3M Scotchfil Electrical Insulation Putty or equal.

1) *Boot Installation*

Place the PVC boot over the joint. Secure the open edges with the nylon fasteners provided.

2) *Wrapping of Joints*

The following insulation system involves the use of high voltage insulating tape and electrical grade rubber-based (RB) putty*, 0282A3529P004, 0282A3529P005 & 0282A3529P008. The high voltage tape will be used both as a filler and also as the final insulation covering. Overlap any expired roll by ½ turn.

***Note:** Electrical grade RB putty will be used only when required to grade voids and smooth out sharp edges of joints and pothead, terminator or entrance bushing connections.*

a. Bus Bars 5kV & 15kV

Apply appropriate number of layers of high voltage tape 0282A3529P004 or 0282A3529P005 (2" or 4" wide), mastic side down, at a medium (Δ) tension to bus bars per *Table C Insulation of Bus Bar*.

***Note:** All bus bars are to be round edge type.*

b. Taped Joints 5kV & 15kV

1. Filler 5kV & 15kV - Apply three (3) layers - ½ lap of high voltage tape 0282A3529P004 or 0282A3529P005 (2" or 4" wide), mastic side down at medium (Δ) tension over all bolt heads, nuts, bars, and splice plates to form a smooth surface for taping. Any bars with sharp burrs and edges must be deburred and smoothed before applying tape.

2. Outerwrap 5kV & 15kV - Apply two (2) layers, ½ lap of high voltage tape 0282A3529P004 (2" wide), mastic side down, maintaining a medium (Δ) tension on the tape while wrapping. Begin the wrap away from the joints, overlapping the adjacent insulation, (epoxy, thermoplastic sleeving, cable or tape) by three (3) inches minimum. Where potheads or porcelain bushings, etc., are to be wrapped, the tape must overlap the first porcelain skirt. When completing the wrapping of the joint, do not keep tension on the last 2" or 3" of tape. The last few inches should be laid in place without tension. This will prevent the tape end from lifting.

No other taping or paint is required.

***Note:** Medium tension thins a .030"x2" tape to approximately .024"x 1¾", and .030"x4" thins to approximately .024"x 3½".*

Figure 9 Insulation of Bus Bar

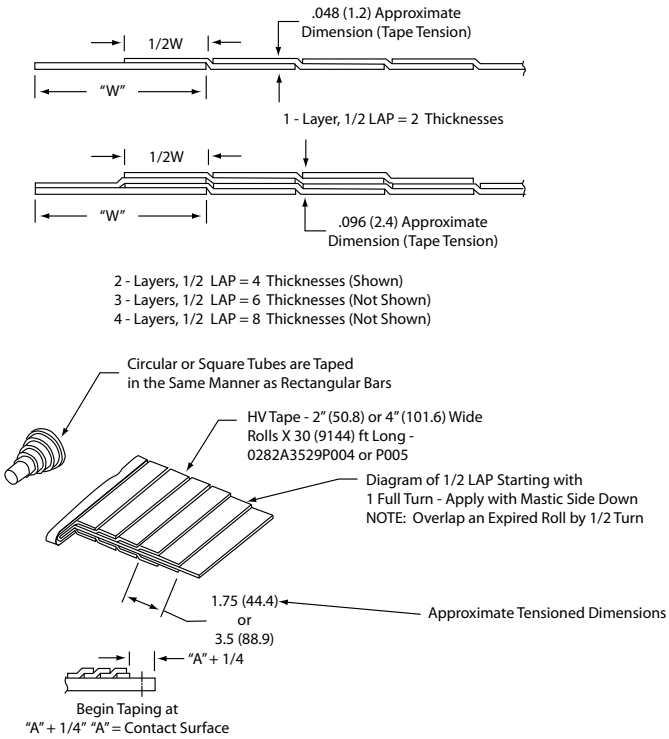

Table C Insulation of Bus Bar

Insulation Range (volts)	Number of Layers	Tape Width (inches)	Approx. Footage of Tape Required to Insulate (1) Linear Foot of Bus Bar (2" & 4" Wide Rolls are 30' Long)						
			Bar Sizes (inches)						
			⅛ x 2 ¼ x 2	¼ x 3 ⅜ x 3	½ x 3 ⅝ x 3	¼ x 4 ⅜ x 4	½ x 4 ⅝ x 4	¼ x 6 ⅜ x 6	½ x 6 ⅝ x 6
1058 to 5000	1 Layer •	2	4	5	6	8	9	11	12
	½ Lap *	4	2	3	3	4	5	5	6
5001 to 15000	2 Layers •	2	9	11	12	18	19	23	24
	½ Lap *	4	5	6	6	9	10	11	12

Note: • *Apply tape at medium tension to produce a void-free uniform build-up of tape. A medium tension thins a .030" x 2" tape down to .024" x 1¾" and .030" x 4" down to .024" x 3½". Apply with mastic side down.*

• *Apply 3 layers - ½ lap for conductors passing through CTs.*

Figure 10 Single Bus Bar Connection Joint

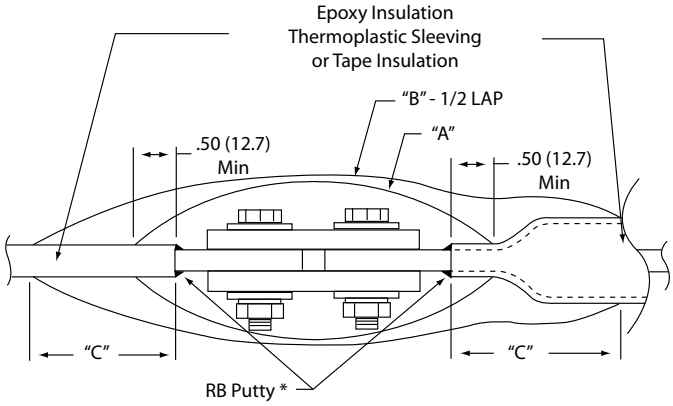

Table D Insulation of Single Bus Bar Connection Joint

Insulation Level (kV)	Inner Filler "A"	Outer Wrap "B"	"C" (inches)	Approx. Number Rolls per Joint of HV Tape Δ	
				2" or 3" Bars	4" or 6" Bars
5 or 15	3 Layers HV Tape Δ	2 Layers HV Tape Δ	3	1 Roll HV Tape Δ	2 Rolls HV Tape Δ

Note: ** Electrical grade rubber base putty 0282A3529P008 in roll form will be used to grade voids and smooth out sharp edges of joints. This putty has no insulation value.*
1 roll is ½" x 1½" x 5' long.

Δ High voltage insulating tape 0282A3529P004 - Roll is .030 x 2" x 30' long. Apply with mastic side down.

Figure 11 Double Bus Bar Connection Joint

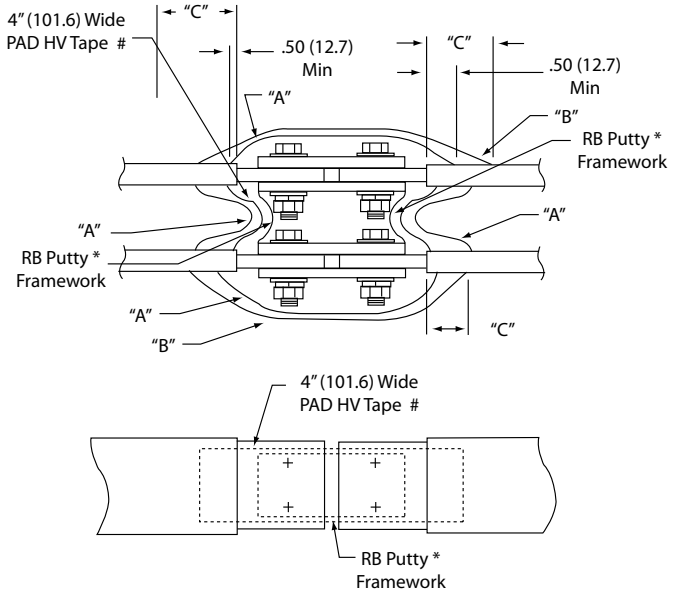

Table E Insulation of Double Bus Bar Connection Joint					
Insulation Level (kV)	Inner Filler "A"	Outer Wrap "B"	"C" (inches)	Approx. Number of Rolls per Joint of HV Tape Δ	
				2" or 3" Bars	4" or 6" Bars
5 or 15	RB Putty* & 3 Layers HV Tape # 3 Layers HV Tape Δ	2 Layers HV Tape Δ	3	½ Roll RB Putty * 1 Roll HV Tape # 1 Roll HV Tape Δ	1 Roll RB Putty * 1 Roll HV Tape # 2 Rolls HV Tape Δ

Note: ** Electrical grade rubber based putty 0282A3529P008 in roll form will be used to grade voids and smooth out sharp edges of joints*

 # HV Tape 0282A3529P005 roll is .030" x 4" x 30' long.

Δ HV Tape 0282A3529P004 roll is .030" x 2" x 30' long. Apply with mastic side down.

O. Final Installation Steps

Space heaters are provided as standard equipment in all outdoor bus assemblies rated 5kV or higher, and in other bus assemblies when requested by the customer. It is recommended that the heaters be energized at all times. No switch or thermostat is provided in the heater circuit unless specified.

Heaters providing 250 watts of heat are furnished for each 10 feet of bus assembly. Powell space heater wiring is a braid covered copper wire. Space heater wires should be connected at shipping breaks after the bus assembly is in place and the assembly bolts have been properly tightened.

A power supply of the proper voltage and capacity must be connected to the space heater circuits. Refer to the drawings supplied with the bus assembly to determine the proper power supply and connection point. If the bus assembly is connected to Powell switchgear, the space heater supply may be provided in the switchgear.

The final installation step is to replace the bus assembly covers and tighten all hardware used to secure these covers.

P. Checks Before Energizing

Before energizing the bus assembly for the first time, several checks shall be performed. To perform these checks, the bus conductors must be isolated from the remainder of the electrical system. If disconnect switches or circuit breakers are available to isolate the bus assembly, open these devices. If there are no disconnecting devices available, unbolt the last connecting link at the end of the bus assembly.

Check the phasing of the bus assembly from end to end to insure that the connected apparatus is properly phased. This phasing check can be made with a bell set, a buzzer, or an ohmmeter. Check each phase for continuity, and to be sure it is not connected to any other phase or to ground.

Perform an insulation resistance test. Use an insulation resistance tester rated at least 500V. Check each phase by connecting the other two phases to the grounded enclosure and measuring between the phase under test and the enclosure.

Insulation resistance is a function of the length of a bus assembly, the number of bus supports, the number of conductors per phase, and other factors, preclude determination of a fixed value of insulation resistance. For a new, dry installation, any resistance less than one megohm per kV of rated voltage should be questioned. Record the values obtained from this test for future use in the maintenance of the bus. See *Ch 5 Maintenance* for further information.

If it is desired to perform a power frequency withstand test (ac "hipot") on the bus conductors, the test voltage should not exceed 75% of the 60Hz hipot voltage given in Table A for the class of bus being tested. DC hipot testing is not recommended for bus, but if it is required, the test voltage should not exceed 75% of the dc hipot voltage given in Table A for the class of bus assembly being tested.

If the bus assembly is equipped with heaters, the heaters and their wiring should be checked for insulation resistance to ground. Disconnect the power source from the heater circuit and remove any deliberate grounds on the heater wiring. Connect all conductors of the heater circuit together and use an insulation resistance tester rated 500V to test between the conductors and ground.

Reconnect the heater circuit and energize it from the proper power source. Check that all heaters are operating. This may be done by calculating the expected heater current from the heater circuits shown on the bus drawings and checking the current with a hook-on ammeter or other appropriate test instrument. Heater operation may also be checked by feeling near the heater location to note whether or not it is producing heat.

⚠ CAUTION

Do not touch the heater elements. Severe burns may result from direct contact with an energized heater.

Once these checks have been made successfully, reconnect and reinsulate any connections that were disconnected for the checks, and replace any covers removed. The bus assembly should now be ready for energizing.

Q. Energizing the Bus Assembly

⚠ CAUTION

The bus assembly is a component of a high power electrical system. Operation of electrical power systems should be done only by experienced personnel qualified in the operation of such systems.

Confirm that overcurrent protective devices on the source side of the bus are in place and operating properly before energizing the bus assembly.

Energize the bus assembly by closing the switching device which feeds it. Check along the length of the bus assembly to be sure no abnormal operating conditions are evident. The bus assembly is now ready to be loaded by closing switching devices feeding loads through the bus assembly.

Bus assemblies, when operating properly, may have a moderate 60Hz hum. Excessive noise may be an indication of hardware that has not been tightened or of metal parts that have been improperly assembled. If this occurs, the bus assembly should be deenergized until the cause has been corrected.

Ch 5 Maintenance

NOTICE

Before attempting any maintenance work, it is important to study and fully understand the safety practices outlined in Chapter 2 of this instruction bulletin. If there is any reason to believe there are any discrepancies in the descriptions contained in this instruction bulletin, or if they are deemed to be confusing and/or not fully understood, contact Powell immediately.

Inspect bus assemblies in normal service once a year or after any severe electrical fault. Bus assemblies operating in severe environments, such as excessive dust, salt spray, chemical vapors, etc., may require more frequent inspection. Bus assemblies operating in clean, dry, indoor locations may need inspection less frequently.

⚠ WARNING

Prior to removing any covers for service, deenergize the bus assembly, open switching devices at both ends of the bus assembly, and ground the source conductors. Failure to do so may result in death or serious injury.

Remove the covers from the bus assembly and examine the interior for any moisture or signs of previous wetness. Replace or thoroughly dry and clean any insulating material which is damp or wet or shows accumulation of deposited material from previous wetting. For indoor assemblies, eliminate the source of any dripping onto the bus assembly and any other source of moisture. For outdoor assemblies, seal off any cracks or openings which have allowed moisture to enter the bus assembly or its connection boxes.

Thoroughly clean any accumulation of dust and dirt by using a brush, vacuum cleaner, or clean lint-free rags. If the main bus bars are insulated and foreign material cannot be removed by dusting or wiping with a dry rag, only denatured alcohol or isopropyl alcohol should be used as a solvent to remove materials from the insulation surface.

⚠ CAUTION

Do not use commercial cleaners or solvents to clean bus insulation. These materials may destro the insulating sleeve.

Carefully inspect all visible electrical joints and terminals. Check tightness of hardware in accordance with Table B. If joints or terminations appear to be badly discolored, corroded or pitted, or show evidence of having been subjected to high temperatures, the parts should be disassembled and replaced or cleaned. The plated surface can be cleaned with a good grade of silver polish. Take care not to remove plating on aluminum or copper parts in joints or terminations. Damaged aluminum or copper parts should be replaced.

Check the insulation resistance prior to reenergizing the bus assembly, using the insulation resistance test described in *Ch 4 Installation, P. Checks Before Energizing*. Keep a permanent record of resistance readings. If readings decrease appreciably with time, deterioration is taking place. If this occurs, find and correct the cause of the insulation deterioration before reenergizing the bus.

If the bus assembly is equipped with heaters, check them for proper operation as described in *Ch 4 Installation, P. Checks Before Energizing*. Replace any heaters that are not functioning properly. The heaters used in bus are long life, low surface temperature heaters. Replace them only with heaters of the same rating and catalog number.

Replace the covers and secure them properly. Reenergize the bus assembly, observing the precautions given in *Ch 4 Installation, Q. Energizing the Bus Assembly*.

Ch 6 Recommended Renewal Parts and Replacement Procedures

Bus assembly enclosures, conductors, and insulation systems do not include any parts that are normally subject to wear or that would normally require replacement during the useful life of the assembly. If routine maintenance reveals parts that require maintenance, they should be ordered at that time.

Order any necessary parts from Powell. Identify the bus assembly for which parts are required by the Powell work order on which it was furnished. The order must be accompanied by a full description of the part or parts needed. If possible, include a copy of the Powell drawing for the assembly with the required parts identified. If this is not possible, a sketch or photograph of the required part should accompany the order.

If the bus assembly is equipped with heaters, Powell recommends keeping spare heaters in stock. A user should stock about 10% of the total number of heaters used in their bus assembly. These heaters should also be ordered from Powell. The catalog number of the heater and the number of the Powell work order on which the bus was furnished should accompany the order.

01.4IB.80000E
Non Segregated Phase Bus Duct

1058V to 15kV, 1200A to 5000A

August 2016

Powell Electrical Systems, Inc.
Service Division - Houston
PO Box 12818 • Houston, TX • 77217

Powered by Safety®

Tel: 713.944.6900 • Fax: 713.948.4569
powellind.com
info@powellind.com