POWELL

Powered by Safety®

01.4IB.66000E
Power/Vac® Vacuum Circuit Breaker

Equipped with ML-17 or ML-17H Mechanism

Contact Information

Powell Electrical Systems, Inc.
powellind.com
info@powellind.com

Service Division
7232 Airport Blvd.
Houston, Texas 77061

Tel: 1.800.480.7273

Signal Words

As stated in ANSI Z535.4-2011 (R2017), the signal word is a word that calls attention to the safety sign and designates a degree or level of hazard seriousness. The signal words for product safety signs are **"Danger"**, **"Warning"**, **"Caution"** and **"Notice"**. These words are defined as:

⚠ DANGER

DANGER indicates an imminently hazardous situation which, if not avoided, will result in death or serious injury.

⚠ WARNING

WARNING indicates a potentially hazardous situation which, if not avoided, could result in death or serious injury.

⚠ CAUTION

CAUTION, used with the safety alert symbol, indicates a hazardous situation which, if not avoided, could result in minor or moderate injury.

CAUTION

CAUTION, used without the safety alert symbol, is used to address practices not related to personal injury.

NOTICE

NOTICE is used to address practices not related to personal injury.

Qualified Person

For the purposes of this manual, a qualified person, as stated in NFPA 70E®, is one who has skills and knowledge related to the construction and operation of the electrical equipment and installations and has received safety training to recognize and avoid the hazards involved. In addition to the above qualifications, one must also be:

1. trained and authorized to energize, deenergize, clear, ground, and tag circuits and equipment in accordance with established safety practices.
2. trained in the proper care and use of personal protective equipment (PPE) such as rubber gloves, hard hat, safety glasses or face shields, flash clothing, etc., in accordance with established safety practices.
3. trained in rendering first aid if necessary.

Contents

Ch 1 General Information 1
A. Scope 2
B. Purpose 2
C. Instruction Bulletins Available Electronically 3
D. Associated Bulletins 3

Ch 2 Safety 4
A. Safe Work Condition 4
B. Safety Guidelines 5
C. General 6
D. Specific 6
E. X-Rays 7
F. Safety Labels 7

Ch 3 Equipment Description 8
A. ML-17 General Description 8
B. ML-17H General Description 8
C. Operation 11
1) Close Spring Charging 11
2) Closing Operation 16
3) Opening Operation 16
4) Trip Free Operation 17
D. Electrical Control Circuit 17
E. Interlocks 18
1) Rating Interference Plate 18
2) Closing Spring Discharge Interlock 19
3) Negative Trip Interlock 19
4) Positive Interlock 19
5) Closing Spring Gag Interlock 19

Ch 4 Preinstallation Checks 21
A. Receiving 21
B. Handling 21
C. Storage 22
D. General 22
E. Safety Precautions 23
F. Shipping Position 23
G. Mechanical Operation 23
H. Electrical Checking 23

Contents

Ch 5 Mechanical Checks and Adjustments 24

A. General 24
B. Slow Closing Operation 24
C. Pull Rod Adjustment 25
D. Trip Latch Clearance 26
E. Overtravel Adjusting Bolts 26
F. Wipe and Gap Adjustment 27
1) General 27
2) Checking 28
3) Adjustment 29
G. Primary Contact Erosion Indication 29
H. Control Coil Plunger Travel 30
1) Trip Coil 30
2) Close Coil 30
I. Control Switches 30

Ch 6 Electrical Checks 32

A. Control Power 32
B. Timing 32
C. Megger® 32
D. High-Potential Test 32
1) Primary Circuit 33
2) Secondary Circuit 33
3) Primary Circuit Resistance 33
4) Vacuum Interrupter Integrity Test 34
5) High Voltage Insulation Integrity 35

Ch 7 Maintenance 36

A. General 36
B. General Service Conditions 36
C. ML-17H Service Conditions 36
D. Fault Interruptions 36
E. Recommended Maintenance 36
F. Lubrication 37

Contents

Ch 8 Recommended Renewal Parts and Replacement Procedures 38

A. Recommended Spare Parts 38
B. Repair Parts 38
C. Ordering Instructions 38
D. Repair and Parts Replacement Procedures 42

1) General 42
2) Pin Retaining Rings 43
3) Front Angle Plate and Charge/Discharge Flag Operating Rod 43
4) Clutch Assembly 43
5) Operations Counter 43
6) Swivel Caster 43
7) Coupling Clamps 44
8) Replacement of Interrupter Assemblies 44
9) Primary Disconnect Contact Assembly (not applicable to 3000A) 44
10) Operating Rod 45
11) Control Switches 45
12) Gear motor Limit Switch Operator 46
13) Trip or Close Coil 46
14) Secondary Disconnect Block and Pins 47
15) Wiring Harness 47
16) Secondary Disconnect Handle 48
17) Anti-Pump Relay (52Y) 48
18) Spring Charging Motor, Spline Adapter and Wind Shaft Drive Pin 48
19) Auxiliary Switch (52 Aux Switch) 49
20) Flywheel Brake 50
21) Pull Rod 51
22) Dashpot 51
23) Overtravel Stop Bolts 52
24) Opening Stop Bolt and Horizontal Connecting Bar 52
25) Toggle Pin 53
26) Trip Roller 53
27) Close Roller 53
28) Trip Shaft Assembly (forward) 54
29) Close Shaft Assembly (forward) 54
30) Close Shaft (rear) 55
31) Closing Spring 55
32) Flywheel Assembly 56
33) Spring Discharge Interlock 56
34) Negative Interlock 57
35) Redundant Negative Interlock 57
36) Closing Spring Gag Interlock 58
37) Rackout Arm Assembly - Standard 58
38) Rackout Arm Assembly - Seismic 58

Contents

Ch 9 Power/Vac® Direct Acting Undervoltage Trip Device 59

A. Introduction 59
B. Safety 59
C. Shipping Position 59
D. Description and Principle of Operation 59
E. Removing or Installing Gag Bolt 62
F. Electrical Checks 63
1) Closing 63
2) Tripping 63
G. Mechanical Adjustments 63
1) Hammer Assembly Reset Position 63
2) Drop Out Voltage 64
3) Device Position 64
4) Pullrod Adjustment 64
5) Solenoid Reset 65
H. Removal and Replacement of the Undervoltage Trip Device 65
1) Removal 65
2) Replacement 65
I. Lubrication 66

Figures

Figure 1 Power/Vac® Circuit Breaker Front View with Cover 9
Figure 2 Power/Vac® Circuit Breaker Front View without Cover 10
Figure 3 Toggle Linkage Positions of ML-17 Mechanism View from Rear 12
Figure 4 Typical Schematic for ML-17 Mechanism, Models -4 13
Figure 5 Typical Wiring Diagram for ML-17 Mechanism 15
Figure 6 Rear View of Power/Vac® Vacuum Circuit Breaker 18
Figure 7 Rating Interference Plate for 1200/2000A Breaker 19
Figure 8 Power/Vac® Vacuum Circuit Breaker Right Side 20
Figure 9 Power/Vac® Vacuum Circuit Breaker Left Side 20
Figure 10 Closing Spring Gag Lock 20
Figure 11 Lifting Holes for Overhead Crane 21
Figure 12 Slow Close Pin on Flywheel 25
Figure 13 Primary Contact Gap and Erosion Indication 27
Figure 14 Wipe Gauge 28
Figure 15a Close Latch Monitor Switch 31
Figure 15b Spring Motor Limit Switch & 52 Charge Switch 31
Figure 15c Latch Checking Switch 31
Figure 16 Pin Retaining Rings 43
Figure 17 Power/Vac® Circuit Breaker with Front Angle Plate Removed 43
Figure 18 Operating Rod Rear View 45
Figure 19 Trip Coil 46
Figure 20 Close Coil 46
Figure 21 Secondary Disconnect 47
Figure 22 Electrical Components - Front View with Front Angle Plate Removed 48
Figure 23 Spring Charge Motor 49
Figure 24 52 Auxiliary Switch 49
Figure 25 Auxiliary Switch Adjustment 50
Figure 26 Flywheel Brake 50
Figure 27 Pull Rod 50
Figure 28 Velocity and Rebound Check 51
Figure 29 Opening Bolt Stop 52
Figure 30 Toggle Pin and Trip Roller 53
Figure 31 Close Roller 53
Figure 32 Trip Shaft (forward) Removal 54
Figure 33 Close Shaft (forward) Removal 54
Figure 34 Close Shaft (rear) 55

Figures

Figure 35 Spring Discharge Interlock 56
Figure 36 Negative and Redundant Negative Interlock 57
Figure 37 Closing Spring Gag Interlock 58
Figure 38 Undervoltage Trip Device 60
Figure 39 Typical Wiring Diagram for ML-17 Mechanism with Direct Acting Undervoltage Trip Device (52/UVD) 61

Tables

Table A Wipe and Gap Measurements 28
Table B AC Hipot Voltages 33
Table C Recommended Spare Parts for Power/Vac® Breakers with ML-17 Mechanism 39
Table D Spare Primary Disconnect Contact Finger Assemblies (by rating) 40
Table D Spare Primary Disconnect Contact Finger Assemblies (by rating) (continued) 41
Table E Gap Required 45

Ch 1 General Information

⚠ WARNING

The equipment described in this document may contain high voltages and currents which can cause death or serious injury.

The equipment is designed for use, installation, and maintenance by knowledgeable users of such equipment having experience and training in the field of high voltage electricity. This document and all other documentation shall be fully read, understood, and all warnings and cautions shall be abided by. If there are any discrepancies or questions, the user shall contact Powell immediately at 1.800.480.7273.

⚠ WARNING

Prior to adjustments, servicing, maintenance, or any act requiring the operator to make physical contact with the equipment, the power source must be disconnected and the equipment grounded. Failure to do so may result in death or serious injury.

NOTICE

The information in this instruction bulletin is not intended to explain all details or variations of the Powell equipment, nor to provide for every possible contingency or hazard to be met in connection with installation, testing, operation, and maintenance of the equipment. For additional information and instructions for particular problems, which are not presented sufficiently for the user's purposes, contact Powell at 1.800.480.7273.

NOTICE

Powell reserves the right to discontinue and to change specifications at any time without incurring any obligation to incorporate new features in products previously sold.

A. Scope

The information in this instruction bulletin describes the following Power/Vac® vacuum circuit breakers equipped with ML-17 or ML-17H mechanism:

- VB-4.76-31.5-4 Rev 1 1200 through 4000A
- VB-4.76-40-4 Rev 1 1200 through 4000A
- VB-4.76-50-4 Rev 1 1200 through 4000A
- VBH-4.76-63-4 Rev 1 1200 through 4000A

- VB-8.25-40-4 Rev 1 1200 through 4000A
- VB-8.25-50-4 Rev 1 1200 through 4000A
- VBH-8.25-63-4 Rev 1 1200 through 4000A

- VB-15-20-4 Rev 1 1200 through 4000A
- VB-15-25-4 Rev 1 1200 through 4000A
- VB-15-31.5-4 Rev 1 1200 through 4000A
- VB-15-40-4 Rev 1 1200 through 4000A
- VB-15-50-4 Rev 1 1200 through 4000A
- VBH-15-63-4 Rev 1 1200 through 4000A

Note: *Rev 1 of circuit breakers with model designators ending with suffix -4 can be identified by looking at the seventh character of the breaker catalog number. If the character is "1", then it is a Rev 1 breaker.*

B. Purpose

The information in this instruction bulletin is intended to provide information required to properly operate and maintain the Power/Vac vacuum circuit breakers described in *Ch 1 General Information, A. Scope*.

This instruction bulletin provides:

1. Safety guidelines
2. General descriptions of the operation and maintenance of the Power/Vac vacuum circuit breaker
3. Instructions for installation and placing the circuit breaker into service
4. Instructions for part replacement
5. Information for ordering renewal parts
6. Procedure for critical adjustments
7. Illustrations, photographs, and description of the circuit breaker

The illustrations contained in this document may not represent the exact construction details of each particular type of circuit breaker. The illustrations in this document are provided as general information to aid in showing component locations only.

All illustrations and photos are shown using deenergized equipment.

⚠ WARNING

Follow the appropriate safety precautions while handling any of the equipment. Failure to do so may result in death or serious injury.

To the extent required, the products described herein meet the applicable ANSI, IEEE, and NEMA Standards; however, no such assurance is given with respect to local codes and ordinances which may vary greatly.

C. Instruction Bulletins Available Electronically

NOTICE

Changes to the instruction bulletin may be implemented at any time and without notice. Go to powellind.com to ensure use of the current instruction bulletin for Powell equipment.

For more information visit *powellind.com*.
To contact the Powell Service Division call 1.800.480.7273, or email *serviceinfo@powellind.com*.

For specific questions or comments pertaining to this instruction bulletin email *documents@powellind.com* with the IB number in the subject line.

D. Associated Bulletins

- 01.4IB.67000A Power/Vac Metal-Clad Switchgear

Ch 2 Safety

A. Safe Work Condition

The information in Section A is quoted from *NFPA 70E 2018 - Article 120, 120.5 Establishing an Electrically Safe Work Condition.*

120.5 Process or Establishing and Verifying an Electrically Safe Work Condition. Establishing and verifying an electrically safe condition shall include all of the following steps, which shall be performed in the order presented, if feasible:

1. Determine all possible sources of electrical supply to the specific equipment. Check applicable up-to-date drawings, diagrams, and identification tags.

2. After properly interrupting the load current, open the disconnecting device(s) for each source.

3. Wherever possible, visually verify that all blades of the disconnecting devices are fully open or that drawout-type circuit breakers are withdrawn to the fully disconnected position.

4. Release stored electrical energy.

5. Release or block stored mechanical energy.

6. Apply lockout/tagout devices in accordance with a documented and established procedure.

7. Use an adequately rated portable test instrument to test each phase conductor or circuit part to verify it is de-energized. Test each phase conductor or circuit part both phase-to-phase and phase-to-ground. Before and after each test, determine that the test instrument is operating satisfactorily through verification on any known voltage source.

N *Exception No. 1: An adequately rated permanently mounted test device shall be permitted to be used to verify the absence of voltage of the conductors or circuit parts at the work location, provided it meets the all following requirements: (1) It is permanently mounted and installed in accordance with the manufacturer's instructions and tests the conductors and circuit parts at the point of work; (2) It is listed and labeled for the purpose of verifying the absence of voltage; (3) It tests each phase conductor or circuit part both phase-to-phase and phase-to-ground; (4) The test device is verified as operating satisfactorily on any known voltage source before and after verifying the absence of voltage.*

N *Exception No. 2: On electrical systems over 1000 volts, noncontact test instruments shall be permitted to be used to test each phase conductor.*

Informational Note No. 1: See UL 61010-1, *Safety Requirements for Electrical Equipment for Measurement, Control, and Laboratory Use, Part 1: General Requirements,* for rating, overvoltage category, and design requirements for voltage measurement and test instruments intended for use on electrical system 1000 volts and below.

N Informational Note No. 2: For additional information on rating and design requirements for voltage detectors, refer to IEC 61243-1, *Live Working - Voltage Detectors - Part 1: Capacitive type to be used for voltages exceeding 1kV a.c.,* or IEC 61243-2, *Live Working - Voltage Detectors - Part 2: Resistive type to be used for voltages of 1kV to 36kV a.c., or* IEC 61243-3, *Live Working - Voltage Detectors - Part 3: Two-pole voltage type.*

8. Where the possibility of induced voltages or stored electrical energy exists, ground the phase conductors or circuit parts before touching them. Where it could be reasonably anticipated that the conductors or circuit parts being de-energized could contact other exposed energized conductors or circuit parts, apply temporary protective grounding equipment in accordance with the following:

   a.. *Placement.* Temporary protective grounding equipment shall be placed at such locations and arranged in such a manner as to prevent each employee from being exposed to a shock hazard (i.e., hazardous differences in electrical potential). The location, sizing, and application of temporary protective grounding equipment shall be identified as part of the employer's job planning.

   b. *Capacity.* Temporary protective grounding equipment shall be capable of conducting the maximum fault current that could flow at the point of grounding for the time necessary to clear the fault.

N Informational Note: ATSM F855, *Standard Specification for Temporary Protective Grounds to be Used on De-energized Electric Power Lines and Equipment,* is an example of a standard that contains information on capacity of temporary protective grounding equipment.

   c. *Impedance.* Temporary protective grounding equipment and connections shall have an impedance low enough to cause immediate operation of protective devices in case of unintentional energizing of the electric conductors or circuit parts.

B. Safety Guidelines

Study this instruction bulletin and all other associated documentation before uncrating the circuit breakers.

Each user has the responsibility to instruct and supervise all personnel associated with usage, installation, operation, and maintenance of this equipment on all safety procedures. Furthermore, each user has the responsibility of establishing a safety program for each type of equipment encountered.

The circuit breakers described in this instruction bulletin are operated by a high-energy, high-speed mechanism that is interlocked to provide specific operating sequences. It is mandatory that the following rules be observed to ensure the safety of personnel associated with usage, installation, operation, and maintenance of these circuit breakers.

The safety rules in this instruction bulletin are not intended to be a complete safety program. The rules are intended to cover only some of the important aspects of personnel safety related to Power/Vac® vacuum circuit breakers.

C. General

1. Only supervised and qualified personnel trained in the usage, installation, operation, and maintenance of the circuit breaker shall be allowed to work on this equipment. It is mandatory that this instruction bulletin, any supplements, and service advisories be studied, understood, and followed.

2. Maintenance programs must be consistent with both customer experience and manufacturer's recommendations, including service advisories and instruction bulletin(s). A well planned and executed routine maintenance program is essential for circuit breaker's reliability and safety.

3. Service conditions and circuit breaker applications shall also be considered in the development of safety programs. Variables include ambient temperature; humidity; actual continuous current; thermal cycling; number of operations; interrupting duty; and any adverse local conditions including excessive dust, ash, corrosive atmosphere, vermin and insect infestations.

D. Specific

1. **DO NOT WORK ON AN ENERGIZED CIRCUIT BREAKER.** If work must be performed on a circuit breaker, remove it from service and remove it from the metal-clad switchgear.
2. **DO NOT WORK ON A CIRCUIT BREAKER WITH THE CONTROL CIRCUIT ENERGIZED.**
3. **EXTREME CARE MUST BE EXERCISED TO KEEP ALL PERSONNEL, TOOLS, AND OTHER OBJECTS CLEAR OF MECHANISMS WHICH ARE TO BE OPERATED, DISCHARGED, OR RELEASED.** These circuit breakers utilize stored energy mechanisms. These mechanisms must be serviced only by skilled and knowledgeable personnel capable of releasing each spring load in a controlled manner. Detailed information regarding these mechanisms is found in this instruction bulletin.
4. **DO NOT ATTEMPT TO CLOSE THE CIRCUIT BREAKER MANUALLY ON AN ENERGIZED CIRCUIT.**
5. **DO NOT USE AN OPEN CIRCUIT BREAKER AS THE SOLE MEANS OF ISOLATING A HIGH VOLTAGE CIRCUIT.** For complete isolation, the circuit breaker shall be in the disconnected position or shall be withdrawn completely.
6. **ALL COMPONENTS SHALL BE DISCONNECTED BY MEANS OF A VISIBLE BREAK AND SECURELY GROUNDED FOR SAFETY OF PERSONNEL PERFORMING MAINTENANCE OPERATIONS ON THE CIRCUIT BREAKERS.**
7. Interlocks are provided to ensure the proper operating sequences of the circuit breakers and for the safety of the user. If for any reason an interlock does not function as described, do not make any adjustments, modification, or deform the parts. **DO NOT FORCE THE PARTS INTO POSITION. CONTACT POWELL FOR INSTRUCTIONS.**

E. X-Rays

When high voltage is applied across the contacts of a vacuum interrupter, there is the possibility of generation of X-rays. The intensity of the X-radiation is dependent on the peak voltage and the contact gap. At the normal operating voltage for this type of equipment, the radiation levels are negligible. At the voltages specified for testing, test personnel shall be in front of the circuit breaker no closer than one meter (3') from the front of the circuit breaker. **THE CIRCUIT BREAKER SHALL BE EITHER FULLY OPEN, OR FULLY CLOSED WHEN MAKING HIGH POTENTIAL TESTS. DO NOT TEST WITH CONTACTS PARTIALLY OPEN.**

F. Safety Labels

The equipment described in this document has **DANGER**, **WARNING, CAUTION,** and instruction labels attached to various locations. All equipment **DANGER**, **WARNING, CAUTION,** and instruction labels shall be observed when the circuit breaker is handled, operated, or maintained.

NOTICE

Warning and Caution labels are located in various places. Do not remove or deface any of these warning/caution labels.

Ch 3 Equipment Description

A. ML-17 General Description

The Power/Vac® vacuum circuit breaker uses sealed vacuum power interrupters to establish and interrupt a primary circuit. Primary connections to the associated metal-clad switchgear are made by horizontal bars and disconnect fingers, electrically and mechanically connected to the vacuum interrupters. Molded interrupter supports, one per phase on a three phase circuit breaker, provide mountings for the primary bars, interrupters, current transfer fingers, and heat dissipation fins (where used). The operating mechanism provides vertical motion at each phase location in order to move the lower contact of the vacuum interrupters from an open position to a spring loaded closed position and then back to the open position on command.

The ML-17 mechanism is of the stored energy type and uses a gear motor to charge a closing spring. During a closing operation, the energy stored in the closing spring is used to close the vacuum interrupter contacts, compress the wipe springs which load the contacts, charge the opening spring, and overcome bearing and other friction forces. The energy then stored in the wipe springs and opening spring will open the contacts during an opening operation.

Closing and opening operations are controlled electrically by the metal-clad switchgear or remote relaying. Mechanical control is provided by manual close and trip buttons on the circuit breaker. The closing spring may be manually charged, and a method for slow closing the primary contacts is available. The mechanism will operate at the AC or DC voltage indicated on the circuit breaker nameplate.

Mechanical and electrical interlocks are provided and are described in *Ch 3 Equipment Description, E. Interlocks*.

B. ML-17H General Description

The ML-17H mechanism is a very high energy unit used in 63kA applications. It has much stiffer wipe springs to achieve the required high closing and latching forces. It also has a double close spring to overcome the forces of the opening and wipe springs. Doubler plates are featured on the frame to withstand the higher dashpot loads. Special runbacks and primary fingers are incorporated to withstand higher peak currents. The use of #271 Loctite® and jam nuts on many bolts and hardware make a more durable mechanism. Also, note that wipe and gap measurements are different for ML-17H breakers than for standard ML-17 breakers.

Figure 1 Power/Vac® Circuit Breaker Front View with Cover

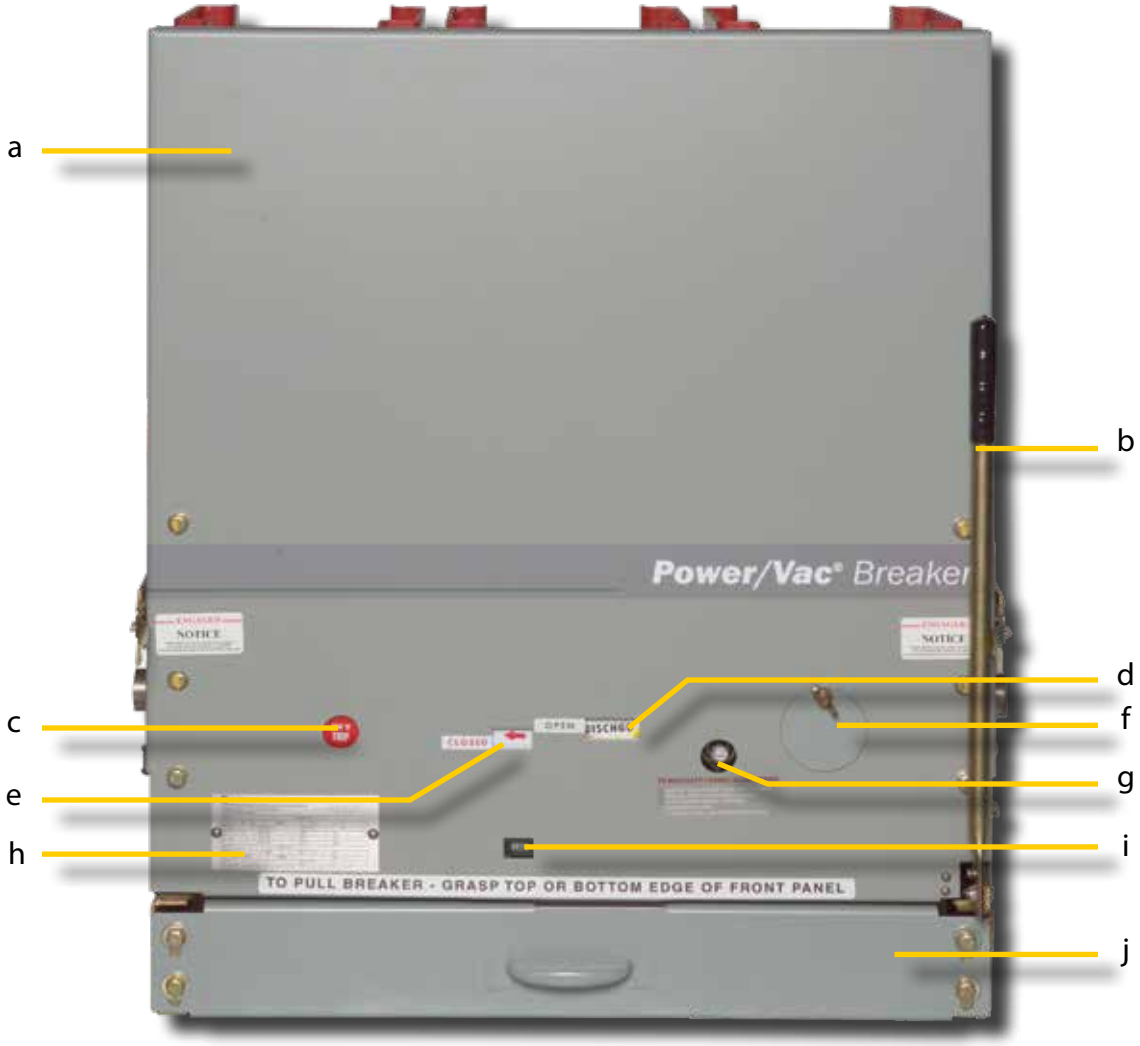

a. Front Cover
b. Secondary Disconnect Handle
c. Manual Trip Button
d. Charge/Discharge Indicator
e. Open/Close Indicator
f. Manual Close Button w/ Optional Cover
g. Manual Wind Shaft
h. Nameplate
i. Operations Counter
j. Optional Roll-In Undercarriage

Figure 2 Power/Vac® Circuit Breaker Front View without Cover

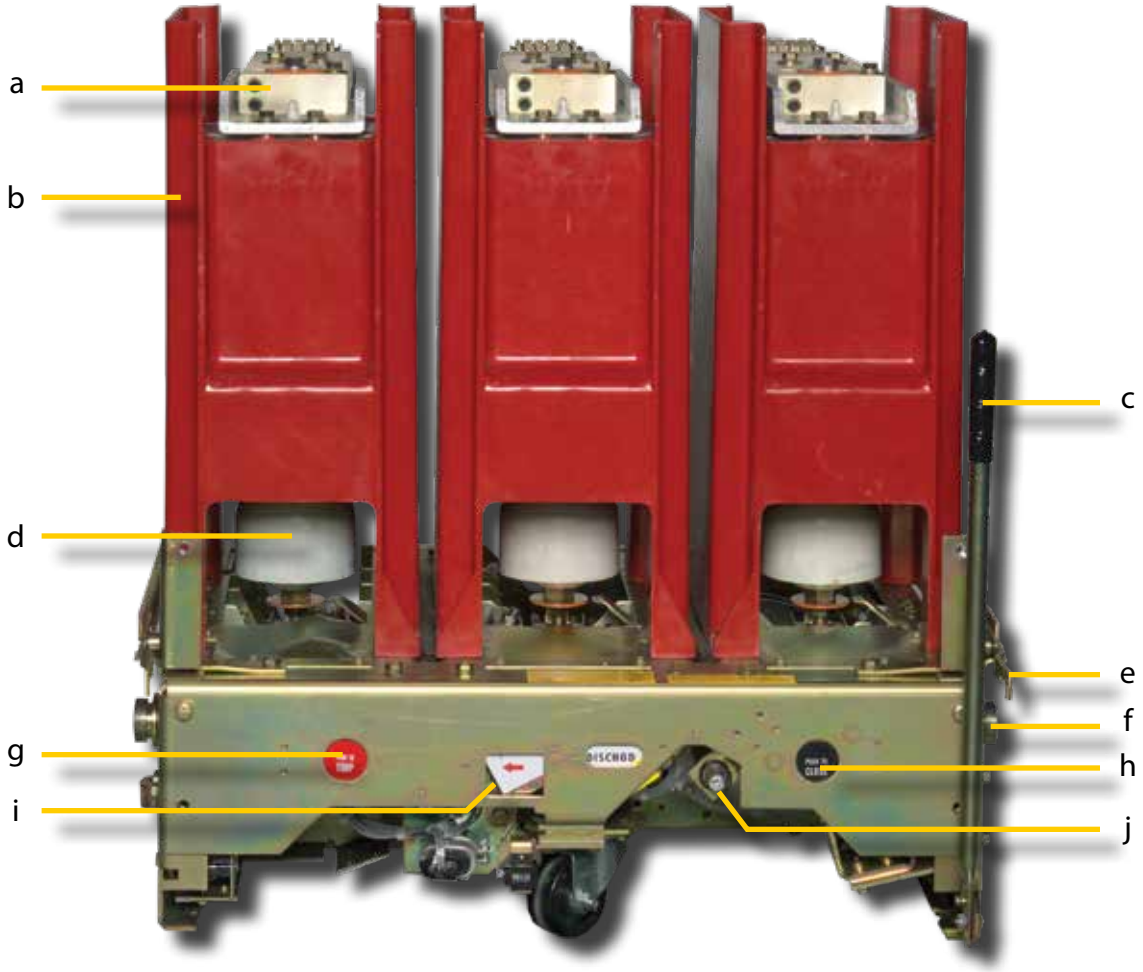

a. Upper Interrupter Connection
b. Interrupter Support
c. Secondary Disconnect Handle
d. Operating Rod
e. Rackout Arm
f. Track Rollers
g. Manual Trip Button
h. Manual Close Button
i. Open/Close Indicator
j. Manual Wind Shaft

C. Operation

1) *Close Spring Charging*

Figure 4 shows the mechanism expanded schematically with the primary contacts open and the closing spring nearly charged. When the closing spring is discharged, the flywheel eccentric *(Figure 4, A)* will be about 180 degrees from where it is shown with respect to center pivot *(Figure 4, C)*. The transfer crank *(Figure 4, #14)* will be rotated counterclockwise, the slotted link *(Figure 4, #17)* will be holding the close toggle *(Figure 4, #20 & #21)* against the frame through link *(Figure 4, #19)*, and the trip latch *(Figure 4, #18)* will be held out of engagement clockwise by the trip toggle roller *(Figure 4, #52)*. The toggle linkage will appear as shown in *Figure 3 (d)*. When the closing spring is discharged, switch operator *(Figure 4, #44)*, operates the motor limit switch *(Figure 4, #43)*. If the close latch checking switch *(Figure 4, #5)* is made and power is available, the gear motor *(Figure 4, #45)* will drive the wind hub *(Figure 4, #11)* counterclockwise. Slow close pawl *(Figure 4, #10)* will be held out of possible engagement with the wind hub notch by the action of the slow close pin *(Figure 4, #48)*.

After some rotation of the wind hub at no load, its notch engages the wind pawl *(Figure 4, #9)* and rotates the flywheel counterclockwise, compressing the close spring assembly *(Figure 4, #6)* and rotating the transfer crank *(Figure 4, B)* shaft clockwise by pushing on rod *(Figure 4, #13)*. As the line of action of the close spring shifts over center on the flywheel and attempts to discharge, the close roller *(Figure 4, #3)* is blocked by the close latch *(Figure 4, #4)* and held until a closing operation is required. Additionally, as the close spring goes over center, the switch operator *(Figure 4, #44)* is spring biased into a notch on the front flywheel *(Figure 4, #2)*. The spring charged indicator arm *(Figure 4, #40)* moves clockwise which, through the action of the rod *(Figure 4, #41)* causes a flag *(Figure 4, #42)* to indicate "CHARGED". A cam *(Figure 4, #12)* engages the wind pawl *(Figure 4, #9)* moving it from contact with the hub *(Figure 4, #11)* notch, thereby allowing the gear motor to coast to a stop when power is removed by the limit switch *(Figure 4, #43)*.

As the close spring is compressed, the slotted link *(Figure 4, #17)* rises, and the close toggle *(Figure 4, #20 & #21)* forms a more acute angle until the closing spring goes over center and the trip latch *(Figure 4, #18)*, is spring biased into place under the trip roller. When the trip latch is in place, the latch checking switch *(Figure 4, #47)* closes.

With the close spring charged and the breaker open, the toggle linkage is as shown in *Figure 3 (a)*.

If control power is lost, or manual operation desired, the close spring may be manually charged by using a 5/8" hex socket ratchet type wrench to rotate the manual charging wind shaft, *(Figure 1, g)*, in the direction indicated by the arrow until the yellow indicator shows "CHARGED".

Figure 3 Toggle Linkage Positions of ML-17 Mechanism View from Rear

a) Breaker Open-Close Spring Charged

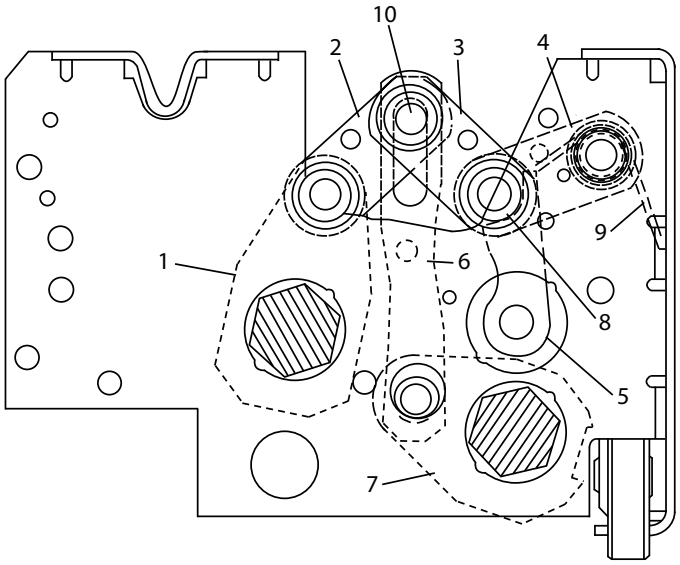

b) Breaker Closed-Close Spring Discharged

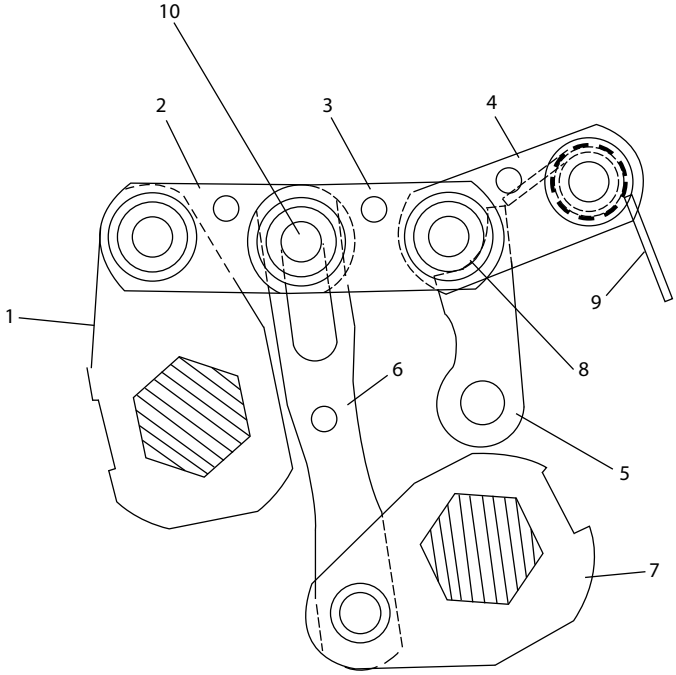

c) Breaker Closed-Close Spring Charged

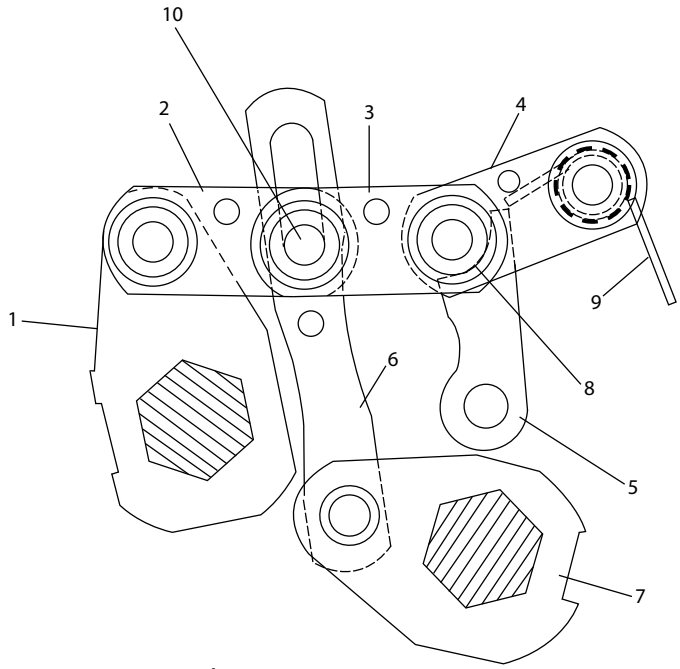

d) Breaker Open-Close Spring Discharged

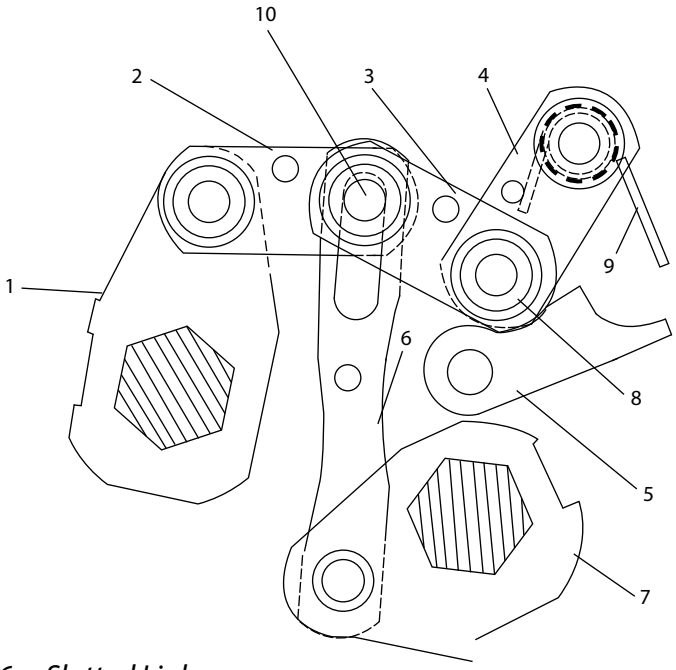

1. *Output Crank*
2. *Link-Output Crank to Close Toggle*
3. *Link-Close Toggle to Trip Toggle*
4. *Link Trip Toggle to Frame*
5. *Trip Latch*
6. *Slotted Link*
7. *Transfer Crank*
8. *Trip Roller*
9. *Linkage Return Spring*
10. *Toggle Pin*

Figure 4 Typical Schematic for ML-17 Mechanism, Models -4

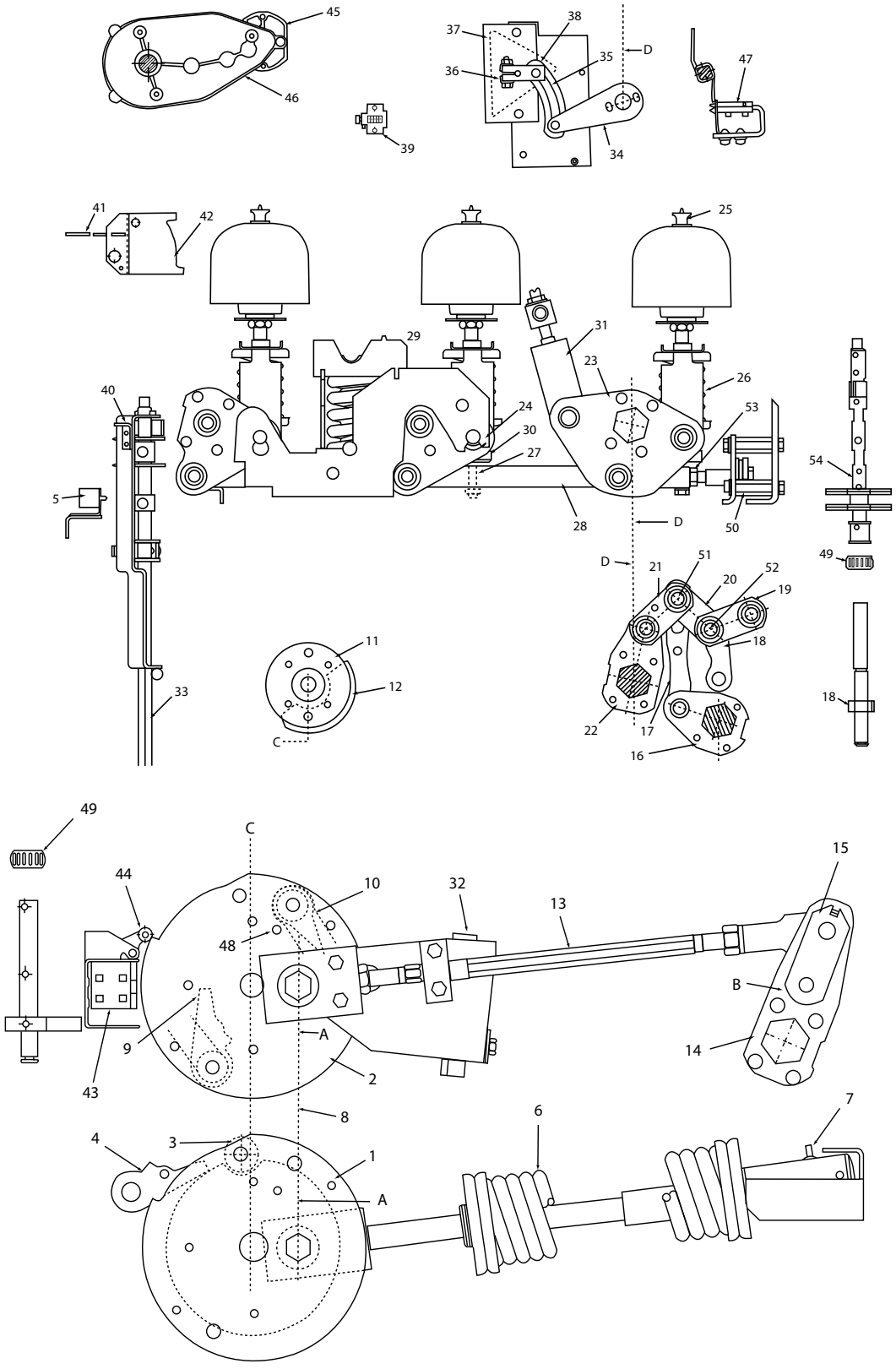

See callouts for Figure 4 on page 13

Callouts for Figure 4

1. *Rear Flywheel Section*
2. *Front Flywheel Section*
3. *Close Roller*
4. *Close Latch*
5. *Close Latch Monitor Switch*
6. *Closing Spring Assembly*
7. *Blocking Pin in Closing Spring Assembly*
8. *Hex Shaft with Connection Blocks on Flywheel*
9. *Wind Pawl*
10. *Slow Close Pawl*
11. *Wind Hub*
12. *Pawl Disengagement Cam Surface - On Frame*
13. *Pull Rod*
14. *Adjustable Throw Transfer Crank*
15. *Adjustment Link (Factory Adjustment Only)*
16. *Short Transfer Crank*
17. *Slotted Link*
18. *Trip Latch*
19. *Link - Trip Toggle to Frame*
20. *Link from Close Toggle to Trip Toggle*
21. *Link from Output Crank to Close Toggle*
22. *Output Crank*
23. *Pole 1 Bell Cranks*
24. *Wipe Spring Trunnion Block*
25. *Interrupter Operating Rod Connection*
26. *Wipe Spring*
27. *Overtravel Stop Adjustment - On Each Pole*
28. *Horizontal Connecting Bar*
29. *Opening Spring Assembly*
30. *Opening Stop Block*
31. *Dashpot*
32. *Brake (on ML-17H Mechanism Only)*
33. *Closing Latch Shaft*
34. *Auxiliary Switch Drive Arm*
35. *Idler Link*
36. *Switch Drive Arm*
37. *Auxiliary Switch*
38. *Position Indicator Flag*
39. *Operation Counter*
40. *Spring Charge Indicator Arm*
41. *Rod*
42. *Spring Charge-Discharge Indicator Flag*
43. *Gear Motor Limit Switch*
44. *Gear Motor Limit Switch Operator*
45. *Gear Motor*
46. *Gear Motor Housing*
47. *Trip Latch Checking Switch*
48. *Slow Close Pin*
49. *Retaining Clamp*
50. *Opening Stop*
51. *Toggle Pin*
52. *Trip Roller*
53. *Horizontal Bar Stop Locking Nut*
54. *Trip Shaft*

A. *Eccentric Shaft Connecting Flywheel Halves*
B. *Hex Shaft Connecting Transfer Cranks*
C. *Flywheel Rotation Axis*
D. *Hex Shaft Connecting Output Cranks*

Figure 5 Typical Wiring Diagram for ML-17 Mechanism

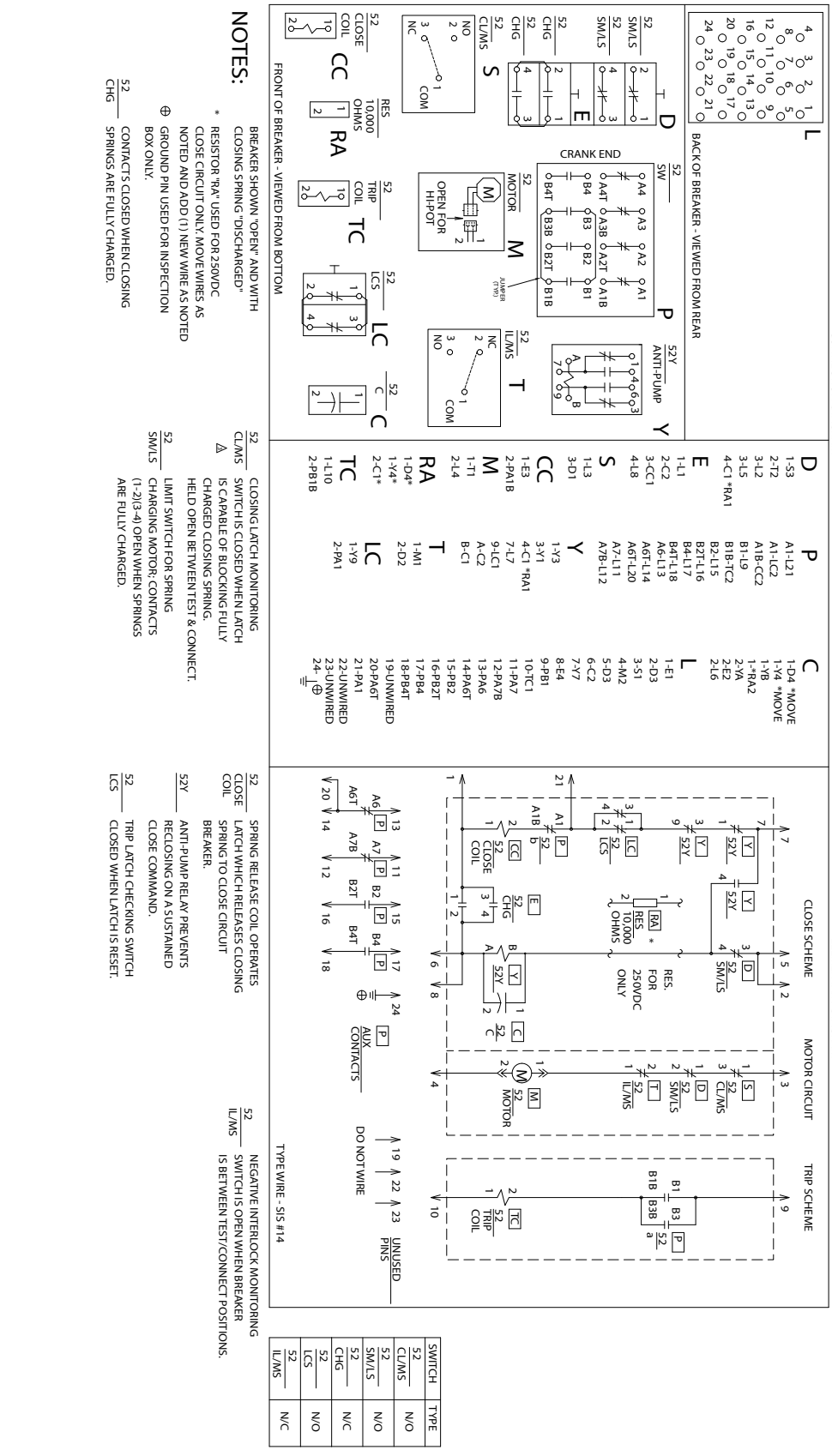

2) *Closing Operation*

By either energizing the close solenoid or depressing the manual close button, the close latch *(Figure 4, #4)* is rotated counterclockwise and releases the close roller *(Figure 4, #3)* permitting the flywheel *(Figure 4, #1 & #2)* to rotate counterclockwise by the force of the close spring. This action, transmitted to the slotted link *(Figure 4, #17)* by means of the pull rod *(Figure 4, #13)*, transfer crank *(Figure 4, #14 & #16)*, pulls the close toggle through the center against link *(Figure 4, #19)* which is tied to the frame. This action rotates the output crank *(Figure 4, #22)* counterclockwise. The Pole 1 bellcranks *(Figure 4, #23)*, on the same shaft as the output crank, also rotate counterclockwise, and by means of the horizontal connecting bar *(Figure 4, #28)* rotate Pole 2 and 3 bellcranks. This rotation compresses the opening spring *(Figure 4, #29)* closes the vacuum interrupters connected with each operating rod *(Figure 4, #25)* and compresses the wipe spring *(Figure 4, #26)* on each pole when the trunnion *(Figure 4, #24)* continues moving after the operating rod *(Figure 4, #25)* stops. Rotation of an arm *(Figure 4, #34)* coupled to the output shaft *(Figure 4, D)* changes the auxiliary switch *(Figure 4, #37)* position, and the position flag *(Figure 4, #38)* indicates "CLOSED". The lever *(Figure 4, #44)* is moved out of the notch in the flywheel *(Figure 4, #2)* and, with the close latch *(Figure 4, #4)* in position to catch the close roller, the limit switch *(Figure 4, #43)* energizes the gear motor as described under *Ch 3 Equipment Description, C. Operation, 1) Close Spring Charging*. With the breaker closed, closing spring discharged, the toggle linkage appears as shown in *Figure 3 (b)*. With the circuit breaker in the closed position, the links *(Figure 4, #17)* can move up past the close toggle without disturbing it as they are slotted to accommodate a close spring charged, breaker closed, the toggle linkage appears as shown in *Figure 3 (c)*.

3) *Opening Operation*

By either energizing the trip solenoid or depressing the manual trip button, the trip latch *(Figure 4, #18)* is rotated clockwise permitting the trip toggle *(Figure 4, #19 & #20)* to collapse and the vacuum interrupter contacts to open under the force of the wipe springs *(Figure 4, #26)* and opening spring *(Figure 4, #29)*. At the end of the opening stroke, a stop block *(Figure 4, #30)* on the bottom of the trunnion *(Figure 4, #24)* strikes set screws in the horizontal connecting bar *(Figure 4, #28)* which limits the over travel. At the same time an opening stop is provided by a plate and buffer assembly *(Figure 4, #50)*. An opening dashpot *(Figure 4, #31)* controls opening velocity and prevents excessive rebound of the interrupter contacts. Rotation of the output shaft *(Figure 4, D)* from a closed to an open position operates the auxiliary switch *(Figure 4, #37)* as described in *Ch 3 Equipment Description, C. Operation, 2) Closing Operation* and interrupts the trip coil circuit. If the closing spring is charged, the close toggle can raise to the top of the slotted link *(Figure 4, #17)* thereby permitting the trip toggle to reset and the trip latch to fall in place under its roller preparatory to a closing operation. If the closing spring is not charged, the trip latch is held rotated clockwise until the close spring is compressed as described in *Ch 3 Equipment Description, C. Operation, 1) Close Spring Charging*. Electrically initiated closing is blocked by the latch checking switch *(Figure 4, #47)* when the trip latch is not reset.

4) Trip Free Operation

The linkage *(Figure 4, #19-21)* is mechanically trip free in any location on the closing stroke. This means that energization of the trip coil while closing after the auxiliary switch contacts change position will rotate the trip latch *(Figure 4, #18)* clockwise and permit the circuit breaker to open. The linkage will reset as in a normal open operation, the flywheel will complete its rotation, and the closing spring will recharge as described under SPRING CHARGING.

D. Electrical Control Circuit

A typical Power/Vac® circuit breaker ML-17 mechanism wiring diagram is shown in *Figure 5*. Check the wiring diagram supplied with the actual circuit breaker for its wiring.

The closing spring charging circuit is established through:

- The 52CL/MS (close latch monitoring switch) when the close latch is reset
- The 52SM/LS (spring motor limit switch) when the closing spring is discharged
- The 52IL/MS (negative interlock monitoring switch) when the breaker is in the test or connected position

When the closing spring is charged the 52SM/LS interrupts the circuit.

The close circuit is established through two normally closed relay (anti-pump) contacts, 52Y, and the latch checking switch 52/LCS, if the trip latch is reset. An auxiliary switch "b" contact closes when the breaker is open and opens when the breaker is closed. During a close operation, flywheel rotation closes the 52 SM/LS contact, picking up the 52Y relay coil thereby opening the normally closed contacts to open the close coil circuit and seal the close signal in through the 52Y relay normally open contact. The sealing prevents reclosing on a sustained close command as the close signal must be removed to drop out the 52Y relay, and reestablish the close circuit, thereby providing and anti-pump feature.

Circuit breaker mounted auxiliary switch contacts not used in the control circuit are brought out for control and indication functions. The metal-clad equipment may provide a breaker operated stationary auxiliary switch for additional contacts (3, 6 or 10 stages are available).

⚠ CAUTION

To prevent arcing and burning of the motor circuit pins, deenergize the compartment circuit power. If deenergizing the compartment control circuit power is not possible, perform the following steps prior to racking the circuit breaker into the connected position:

1. ***Place the circuit breaker into the disconnected position.***
2. ***Open the charging motor circuit by either (a) manually charging the closing spring, or (b) by depressing and holding the manual close button.***
3. ***Pull down the handle and extend the breaker secondary control contact block to firmly engage the with the mating secondary control contact block in the compartment.***
   Note: this is now the TEST position of the disconnected/test position.
4. ***If option 2(b) above was performed, release the close button to activate the spring charging motor.***

E. Interlocks

Each Power/Vac® vacuum circuit breaker is provided with the following interlocks:

1) *Rating Interference Plate*

The rating interference plate *(Figure 6, f)* permits only a breaker of the matching continuous current, voltage and interrupting kA rating to be inserted into a metal-clad breaker compartment.

A 1200/2000A dual rated breaker is available for interrupting ratings 31.5kA and lower. The 1200/2000A breaker can be used in either a 1200A or a 2000A compartment. The rating interference plate must be adjusted to match the current rating of the compartment. This is done by positioning the outer interference plate so that the edge lines up with the desired current indicated on the label attached to the breaker just above the rating interference plate.

Figure 6 Rear View of Power/Vac® Vacuum Circuit Breaker

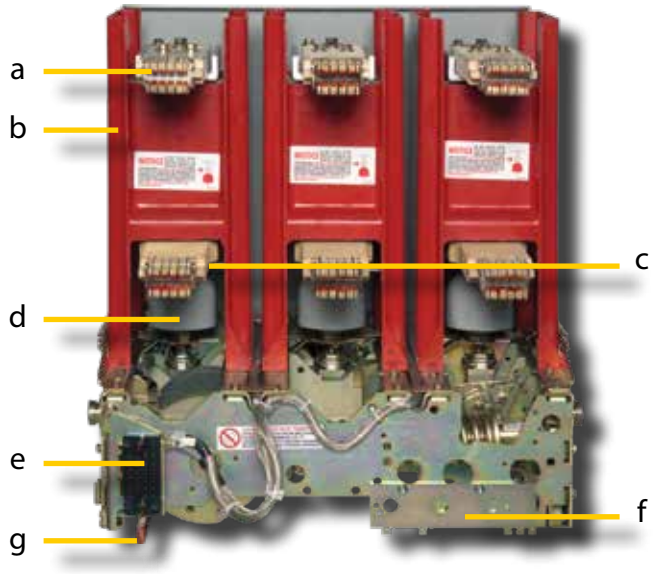

a. Primary Disconnect Fingers
b. Interrupter Support
c. Coupling Clamp (located above operating rod)
d. Operating Rod
e. Secondary Disconnect Coupler
f. Interference Plate
g. Ground Shoe

Figure 7 Rating Interference Plate for 1200/2000A Breaker

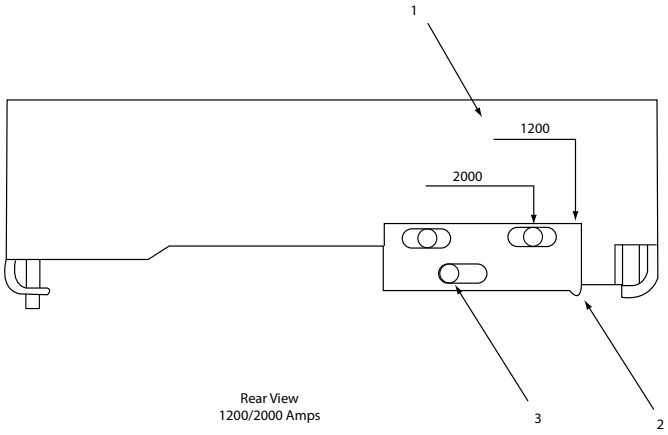

1. *Current Setting Indicator*
2. *Rating Interference Plate*
3. *Positioning Bolt*

2) *Closing Spring Discharge Interlock*

The function of the closing spring discharge interlock is to prevent racking into or out of metal-clad switchgear a breaker with the closing spring charged. This is accomplished by a roller on the right hand side of the mechanism *(Figure 8, c)*, which contacts the racking mechanism and discharges the closing spring except if the breaker is in the "Disconnect/Test" position or the "Connect" position in the metal-clad switchgear. This interlock also opens the CL/MS switch in the motor charging circuit to prevent charging the closing springs when the breaker is between the "Disconnect/Test" or "Connect" position in the metal-clad switchgear.

3) *Negative Trip Interlock*

The function of the negative trip interlock *(Figure 9, f)* is to disengage the trip latch from the trip latch roller thereby preventing a closing operation. The interlock also opens the latch checking switch (52LCS) in the closing circuit thereby removing the close circuit power. The negative interlock is in operation while the breaker is moving between the "Disconnect/Test" position and the " Connect" position. A redundant negative trip interlock *(Figure 9, e)* is a backup to the negative trip interlock and provides the same function except it operates only near the connect position.

4) *Positive Interlock*

The positive interlock *(Figure 9, d)* operates to prevent the racking of a breaker that is closed. A linkage connected to the horizontal connecting bar extends a detent bar out from the side of the mechanism frame when it is in the closed position. If the closed breaker is in the " Connect" or "Disconnect/Test" position in the metal-clad switchgear the detent bar locks into the racking mechanism to prevent access to the hex section of the jack screw. The positive interlock also prevents the lift truck from picking up a closed breaker.

5) *Closing Spring Gag Interlock*

The closing spring gag interlock *(Figure 10)* is provided on the breaker to prevent a breaker that has a gagged closing spring from entering the metal-clad switchgear unit. This is accomplished by projecting a lever out of the left side of the mechanism when the closing spring is gagged.

Figure 8 Power/Vac® Vacuum Circuit Breaker Right Side

a. Rackout Arm
b. Track Rollers
c. Closing Spring Discharge Roller

Figure 9 Power/Vac® Vacuum Circuit Breaker Left Side

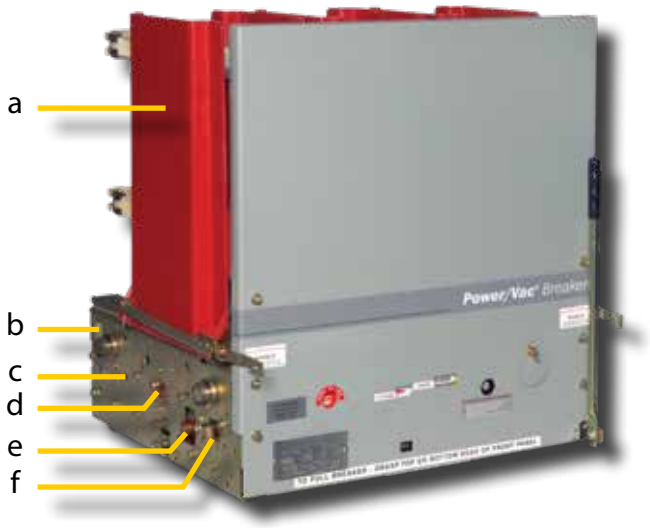

a. Interrupter Support
b. Closing Spring Gag Interlock
c. Trip Latch Blocking Hole
d. Positive Interlock Bar
e. Redundant Negative Interlock Roller
f. Negative Interlock Roller

Figure 10 Closing Spring Gag Lock

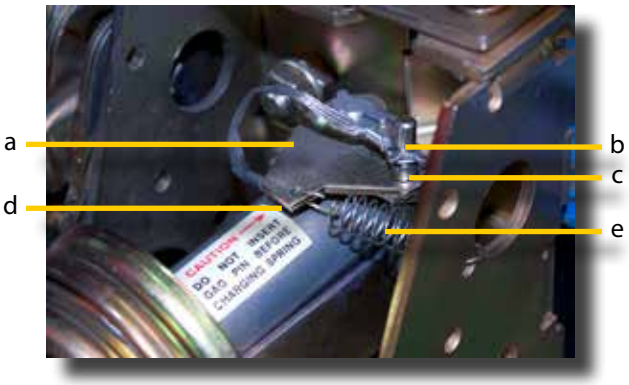

a. Close Spring Interlock Lever
b. Close Spring Blocking Pin
c. Storage Hole
d. Blocking Hole (under lever)
e. Interlock Lever Return Spring

Ch 4 Preinstallation Checks

A. Receiving

When the circuit breaker is received check for any sign of damage. If damage is found or suspected, file all claims immediately with the transportation company and notify the nearest Powell representative.

Estimated size and weight for shipping a Power/Vac® on a pallet:

- Size: 35″ width x 35″ depth x 45″ height
- Weight: 820 lbs.

The circuit breaker is enclosed in the carton used for shipment. The carton is attached to the shipping pallet by metal bands. Remove these bands and lift the carton from the pallet so that the circuit breaker is visible. The circuit breaker is attached to the pallet by metal shipping brackets. When these are removed the circuit breaker may be removed from the shipping pallet. Refer to *Ch 4 Preinstallation Checks, B. Handling*, for more information.

B. Handling

When lifting the breaker, use of the specially designed lift truck is recommended. It is necessary to use the lift truck when placing a breaker into or removing it from the metal-clad switchgear. After the circuit breaker has been removed from its shipping pallet it may be rolled on its own wheels on a level surface. This is the preferred way of handling the circuit breaker. When rolling the circuit breaker it should be pushed and steered by the steel frame or the front cover.

⚠ CAUTION

Do not handle or move the circuit breaker by the primary disconnecting devices, as damage may occur.

If necessary, the circuit breaker can be moved by an overhead crane using the four lifting holes (two on each side) which have been provided for hooks at the bottom on the circuit breaker mechanism housing *(Figure 11)*.

Figure 11 Lifting Holes for Overhead Crane

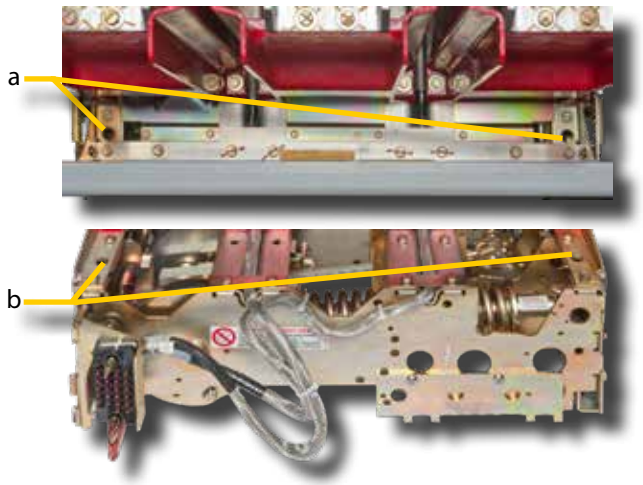

a. Lifting Holes - Front (Top View)
b. Lifting Holes - Rear

C. Storage

Shipping and storage of electrical equipment requires measures to prevent the deterioration of the apparatus over a long unused period. The mechanical and dielectric integrity must be protected. Electrical equipment is designed for use in a variety of environments. When the equipment is in transit and storage, these design considerations are not fully functional. In general, the following measures must be considered.

1. Equipment designed for indoor installation must be stored indoors in a climate controlled environment to prevent condensation of moisture. Exposure to rain and the elements, even for a short period, can permanently damage the equipment. Space heaters within the equipment should be energized, if so equipped. Humidity controlling desiccant materials should be utilized when space heaters are not provided or cannot be energized. The temperature should be kept above 33°F/1°C and below 140°F/60°C. The relative humidity should be kept below 60% or a dew point of 15°C/59°F. The equipment should be stored in such a manner as to leave all doors and panels accessible for inspection. The equipment must be inspected on a routine basis to assure operational integrity.
2. Equipment designed for outdoor exposure may be stored either in indoor or outdoor storage locations. The equipment must be protected from airborne external contaminates if stored outdoors. Outdoor storage will also require additional care to maintain temporary covers over the openings and shipping splits. The equipment must be provided with control power to facilitate the energization of space heaters, as well as other temperature and humidity controlling equipment. The temperature should be kept above freezing (>33°F/1°C) and below (<140°F/60°C). The relative humidity should be kept below 60% or a dew point of 15°C/59°F. The equipment should be stored in such a manner as to leave all doors and panels accessible for inspection. The equipment must be inspected on a routine basis to assure its integrity.
3. The auxiliary control devices, ship loose material and protective relays must also be protected. This includes items such as battery chargers, UPS systems, lighting, installation hardware and air conditioning. If prolonged storage is anticipated, humidity controlling desiccant materials should be utilized. Desiccant packets should be installed in all compartments and packing containers.

D. General

Before the initial installation of the Power/Vac® circuit breaker the device should be thoroughly inspected and checked for proper operation and adjustments. Each of the items on the following list should be performed:

1. Check the breaker nameplate to see that the breaker rating is for the intended application.
2. Perform the inspection and mechanical checks as described in *Ch 4 Preinstallation Checks, G. Mechanical Operation*.
3. Check the breaker control wiring and the vacuum integrity of the interrupters as described in *Ch 4 Preinstallation Checks, H. Electrical Checking*.

E. Safety Precautions

The Power/Vac® circuit breaker uses powerful springs for energy storage.

⚠ CAUTION

Do not work on interrupters or the mechanism unless the closing spring is either discharged or gagged, the breaker is open, and all electrical control power is removed. Failure to do so could cause serious injury to the operator.

Anyone working on the circuit breaker should be familiar with the device as described in this instruction bulletin and should be cognizant of all safety precautions as stated in *Ch 2 Safety*.

F. Shipping Position

The circuit breaker has been shipped in an open and discharged position. To make sure close and open springs are in their discharged position, press the manual close button followed by pressing the manual trip button.

G. Mechanical Operation

Prior to operating the mechanism check the breaker for signs of damage or loose hardware.

Several factory adjustments in the stored energy mechanism are described in this section. NO ADJUSTMENT OF THESE SETTINGS SHOULD BE REQUIRED PRIOR TO COMMISSIONING OR REQUIRED FOR ROUTINE MAINTENANCE. However, these adjustments should be checked prior to commissioning.

CAUTION

Do not adjust these settings unnecessarily, as damage to the circuit breaker may occur.

- Perform the operation as described in *Ch 5 Mechanical Checks and Adjustments, B. Slow Closing Operation*.
- Check the Wipe and Gap as described in *Ch 5 Mechanical Checks and Adjustments, F. Wipe and Gap Adjustment*.
- Check the erosion indication as described in *Ch 5 Mechanical Checks and Adjustments, G. Primary Contact Erosion Indication*.

H. Electrical Checking

Electrical checking consists of operating the breaker electrically and performing the vacuum interrupter integrity test plus those tests required by local operating procedures.

1. To check the electrical operation use the test cabinet if provided or the test position in the metal-clad switchgear. Compare the available control voltage to the voltage indicated on the breaker nameplate. Close and open the breaker several times to check electrical operation.
2. Perform a vacuum interrupter integrity test to verify the condition of the interrupters. Perform the test as described in *Ch 6 Electrical Checks, D. High-Potential Test, 4) Vacuum Interrupter Integrity Test*.
3. The following additional testing may be performed if desired:
   a) Megger tests per *Ch 6 Electrical Checks, C. Megger*.
   b) Primary circuit high potential per *Ch 6 Electrical Checks, D. High-Potential Test, 1) Primary Circuit*.
   c) Secondary circuit high potential per *Ch 6 Electrical Checks, D. High-Potential Test, 2) Secondary Circuit*.
   d) Primary circuit resistance per *Ch 6 Electrical Checks, D. High-Potential Test, 3) Primary Circuit Resistance*.

Ch 5 Mechanical Checks and Adjustments

A. General

Checking the mechanical adjustments may be performed in any order. However, the adjustments associated with the stroke of the mechanism must be performed in the prescribed order since they are related in such a way that the adjustment of one affects the next in the series. These adjustments and the prescribed order are:

1. Pull rod adjustment
2. Trip latch clearance
3. Overtravel stops
4. Wipe and Gap setting

For example, if the pull rod is adjusted, then the trip latch clearance must be checked and adjusted followed by resetting the overtravel stops and then checking and adjusting the wipe and gap setting. However, if only the wipe and gap setting is adjusted, it is not necessary to perform the adjustments preceding it.

When adjusting the pull rod or the trip latch clearance, the overtravel stops should be backed out of the horizontal connecting bar two turns to assure that they do not interfere with the mechanism stroke during the adjustment.

NOTICE

The nameplate containing the breaker rating and serial information is located on the removable front cover. Many maintenance and repair procedures require removal of the front cover. The serial number is also attached to the right side breaker frame between the track rollers on an engraved metal plate. Verify that the serial number on the removable front cover matches the number affixed to the frame before reassembly.

B. Slow Closing Operation

Slow closing the breaker allows observation of the motion of the mechanism while manually cranking it from the open to the closed position. The slow closing operation is required when performing adjustments on the breaker such as setting the pull rod adjustment and when setting the wipe and gap.

1. Manually charge the breaker closing spring using a $^{5}/_{8}$ inch hex socket-ratchet-type wrench for safety, and turn in the direction of the arrow as indicated on the end of the manual wind shaft *(Figure 1, g)*. Several rotations with no apparent load are necessary until the winding mechanism engages the spring-charging pawl.

   As the manual charging shaft is rotated the trip latch will reset first with a small "click". Continued rotation will fully charge the closing spring and a louder sound will be heard. At this time the charge/discharge indicator *(Figure 1, d)* will change from "Discharged" to "Charged". Stop cranking when this occurs.

CAUTION

Check that the closing spring is fully charged with the close roller resting against the close latch.

2. Insert the close spring blocking pin *(Figure 10, b)* by carefully removing it from its storage hole, rotating the interlock lever and inserting it in the blocking hole.

3. Press the manual close button to partially discharge the closing spring against the blocking pin.

⚠ CAUTION

If the manual close button is not pressed prior to performing step 4, the breaker will be damaged.

4. Pull the slow close pin on the flywheel *(Figure 12, b)* and resume ratchet wrench operation of the manual wind shaft. After several rotations at no apparent load, the winding mechanism will engage the slow close pawl and begin the closing operation of the mechanism.

   Continue rotating the manual wind shaft. Be sure the close toggle pin *(Figure 4, #51)* goes over-center and the spacers on the ends of the pin rest against the frame. After the one-half flywheel rotation necessary for closing, the slow close pawl is automatically disengaged.

   The breaker may be opened from this position by pushing the manual trip push button.

   To return the breaker to the open and discharge condition, charge the closing spring as described in *step 1*, remove the close spring blocking pin and push the manual close push button and then the manual trip push button.

Figure 12 Slow Close Pin on Flywheel

a. Flywheel
b. Slow Close Pin

C. Pull Rod Adjustment

The pull rod *(Figure 4, #13)* is a turnbuckle, with a right-hand thread at the crank and a left-hand thread at the flywheel connection. Slow close the mechanism as described in *Ch 5 Mechanical Checks and Adjustments, B. Slow Closing Operation*. As the flywheel rotates the slotted link pulls the closing toggle pin over-center so that the spacers on the end of the pin are resting on the mechanism frame. In this position, the slotted link should be in contact with the closing toggle pin.

CAUTION

If the spacers are not against the frame, the toggle links must be tapped firmly downward so that they rest against the frame.

If the slotted links do not bottom on the toggle pin, readjustment of the pull rod length is required. To adjust the pull rod, loosen the nuts on each end and adjust the rod length until the slotted link bottoms against the toggle pin.

Note: *Before making adjustments to the pull rod the overtravel stop bolts (Figure 4, #27), should be backed out of the horizontal connecting bar two turns.*

Increase the rod length by backing off about ¼ turn so that the slotted links are just free of the pin and can move slightly from side to side.

In this position the slotted links *(Figure 4, #17)* should have no apparent clearance to the pin in the close toggle *(Figure 4, #51)* but should be capable of being moved axially along the pin by firm finger pressure. Tighten the pull rod lock nuts to 30-35 foot pounds of torque.

CAUTION

If the pull rod is too short, i.e., slotted link is too tight against the pin in the closed toggle, the pin may be bent and require replacement.

D. Trip Latch Clearance

Refer to items 5 & 8 in *Figure 3 (a)*. Charge and gag the close spring as described in *steps 1 & 2* of *Ch 5 Mechanical Checks and Adjustments, B. Slow Closing Operation*. With the breaker open, determine the trip latch clearance by depressing the trip roller against the latch face from its spring-reset position. If no apparent motion exists, depress the manual trip push button and see if the trip roller rotates.

The latch clearance should be set between .005 and .040 inch. The trip roller must not rotate when the latch is moved by the manual push button. The clearance may be estimated by pressing the roller down against the latch.

To adjust, loosen the locking nut *(Figure 4, #53)* holding the stop bolt to the horizontal connecting bar, and then unscrew the stop bolt to decrease latch clearance while pushing the manual trip push button in and out until the trip roller just starts to turn.

Note: *Before making adjustments to the trip latch clearance the overtravel stop bolts (Figure 13, l) should be backed out of the horizontal connecting bar two turns.*

Screw in the adjusting bolt until the roller no longer turns. Torque the lock nut to 55 foot-pounds while holding the adjusting screw. This sets latch clearance at a minimum and any mechanism wear will tend to increase the clearance. When 0.060 inch clearance is reached readjustment will be required.

E. Overtravel Adjusting Bolts

Six adjustable bolts *(Figure 13, l)* are threaded into the horizontal connecting bar to provide stops for each pole to prevent overstroking the Power/Vac® interrupters. Each of these bolts should be backed out of the horizontal connecting bar two turns prior to performing adjustments to the pull rod or to the trip latch setting. To adjust the overtravel stop bolts, back off locking nut *(Figure 13, n)* and turn each of the six bolts *(Figure 13, l)* in toward the opening stop block *(Figure 13, k)* until the bolt touches the stop ring (breaker is open for this adjustment). Back off ¼ to ½ turn and tighten the locking nuts *(Figure 13, n)* to 20 to 25 foot-pounds.

F. Wipe and Gap Adjustment

1) General

Wipe is the additional compression of the preloaded wipe spring *(Figure 13, i)* which is used to apply force to the closed vacuum interrupter contacts. Proper adjustment of the wipe springs is necessary to assure that the vacuum interrupter contact will stay closed against the forces which tend to open them due to fault currents and to supply the propelling energy required to attain the correct opening speed needed for a clean interruption of the current.

Gap is the distance between the two vacuum interrupter contacts when the breaker is open. Correct adjustment of the gap assures that the minimum required distance for current interruption is achieved and that the distance is not so great that mechanical damage to the vacuum interrupter occurs.

Wipe and gap are related in such a way that decreasing the wipe increases the gap and increasing the wipe decreases the gap. Therefore, these two adjustments must be coordinated to bring both to within required settings simultaneously.

Figure 13 Primary Contact Gap and Erosion Indication

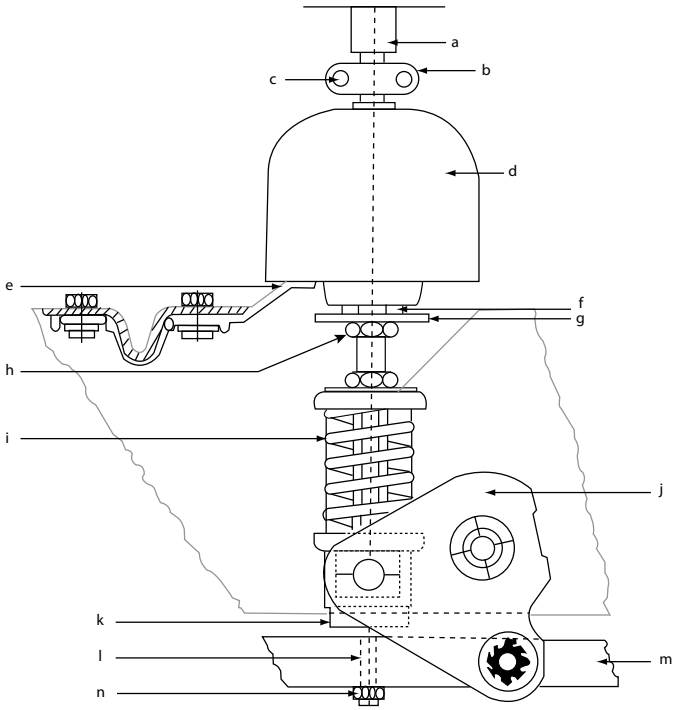

a. Interrupter Moveable Contact
b. Coupling Clamp
c. Socket Head Cap Screws
d. Operating Rod
e. Reference Arm
f. Hex Extension
g. Erosion Indicator Disc
h. Locknut for Operating Rod
i. Wipe Spring
j. Bell Crank
k. Opening Stop Block
l. Overtravel Adjusting Bolt
m. Horizontal Connecting Bar
n. Locknut for Overtravel Adjustment Bolt

Figure 14 Wipe Gauge

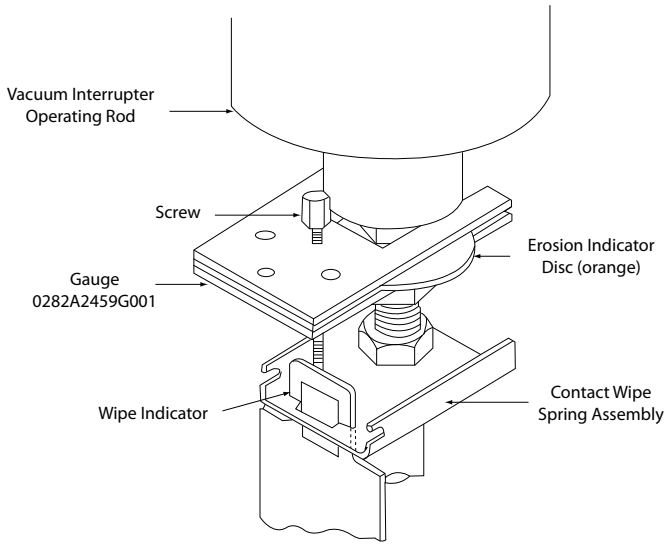

2) Checking

a. Close the breaker.
b. Insert gauge 0282A2459G001 *(Figure 14)* over the orange erosion disc and align the screw with the top of the wipe indicator. Turn the screw until it just touches the wipe indicator. Carefully hold the screw in position while removing the gauge. Measure the extension of the screw below the gauge plate bottom using a dial caliper and record this reading. Perform this measurement on all three phases.
c. Measure the position of the operating rod *(Figure 13, d)* relative to the breaker frame. Measure all three phases. SUGGESTION: place a piece of masking tape vertically on the operating rod. Using a block (approximately 2" high) that spans the breaker mechanism frame, draw a line on the tape to indicate the position when the breaker is closed. Leave the tape in place. Then in *step "f"* draw another line on the tape when the breaker is opened. The distance between these lines is the gap for that phase.
d. Open the breaker by pushing the manual trip push button.
e. Repeat *step b* to measure the position of the wipe indicator with the breaker open. Subtract the two measurements of the screw length to obtain the wipe of each phase.
f. Repeat *step c* to measure the position of operating rod with the breaker in the open position. Subtract the two measurements to obtain the vacuum interrupter contact gap for each phase. (If the suggestion in *step c* was followed, remove the tape from the operating rod, place it on a flat surface and measure the gaps directly as the distance between the two lines on the tape).
g. Compare the wipes and gap measured with the *Table A Wipe and Gap Measurements*.

Table A Wipe and Gap Measurements

Interrupter	Wipe (inches)	Gap (inches)
45A	.156 minimum	.375 to .425
46A		
47A		
48A		
49A		
68A	.155 minimum	.450 to .550

3) *Adjustment*

If wipe and gap adjustments are deemed to be necessary in the field for breakers using 45A, 46A, 47A, 48A & 49A interrupters, the following parameters should be used:

- Wipe: .156 - .265
- Gap: .375 - .425 inches

If the wipe is less than .156, adjustment is required.

If wipe and gap adjustments are deemed to be necessary in the field for breakers using 68A interrupters, the following parameters should be used:

- Wipe: .155 - .180
- Gap: .450 - .550 inches

If the wipe is less than .155, adjustment is required.

a. Determine the amount of adjustment required to bring both the wipe and gap within requirements.
b. Close the breaker.
c. Loosen but do not remove the ¼" socket head cap screws *(Figure 13, c)* holding the coupling clamp *(Figure 13, b)*. Be sure that the clamp can be rotated freely by hand.
d. Hold the hexagon projection at the bottom of the operating rod (1-⅛" wrench) and loosen the adjacent lock nut *(Figure 13, h)* (15/16" wrench).
e. Decrease the wipe (and increase the gap a like amount by turning the operating rod down (clockwise looking from the top) or increase the wipe (while decreasing the gap) by turning the operating rod up (counterclockwise looking from the top).

Note: *The operating rod has 11 threads per inch so that ⅙ turn (one flat) of the operating rod hex will result in approximately .015" change in wipe and gap.*

f. After completing the adjustment, torque the operating rod locknut *(Figure 13, h)*, to 40-50 foot-pounds while preventing the Operating Rod from turning. Tighten the coupling clamp screws to 10-12 foot-pounds.
g. Trip the breaker open. Recheck the wipe and gap and readjust if necessary.
h. If both wipe and gap cannot be brought into the required settings, check the pull rod adjustment and the trip latch clearance. Increase the trip latch clearance to decrease the sum of the wipe and gap or decrease the trip latch clearance to increase the sum of the wipe and gap.

Note: *Do not exceed the specified range of settings on the trip latch.*

G. Primary Contact Erosion Indication

In the closed position, the erosion indicator disc *(Figure 13, g)* below the operating rod is aligned with a reference arm *(Figure 13, e)* on new interrupters. With the breaker in the closed position, the indicator disc after in service fault interruptions will move upward from alignment with the reference point due to contact erosion. Contact erosion will decrease the wipe which may be brought back to normal by performing wipe adjustment. When erosion reaches ⅛" (the misalignment of the indicator disc and the reference arm with the breaker closed) the interrupter should be replaced.

If an appreciable amount (but not more than ⅛") of erosion is indicated, estimate the amount of interrupter life remaining before the ⅛" limit will be reached. Recheck the erosion indicator before reaching the estimated end of life.

Do not readjust the alignment of the erosion indicator except when installing a new vacuum interrupter assembly or replacing the operating rod.

H. Control Coil Plunger Travel

1) *Trip Coil*

With the breaker in the open position and the closing springs charged and gagged, make certain that the trip linkage and trip shaft move freely over the full plunger travel.

2) *Close Coil*

With the breaker open and the closing spring discharged operate the plunger in the same manner as described above for the trip coil. Make certain that the plunger moves freely over it full stroke in the coil.

I. Control Switches

There are two switch locations on the right-hand side of the mechanism and two on the left. On the right side of the breaker, the single switch (CL/MS) is toward the front of the mechanism and monitors the closing latch position. This switch should be adjusted to have the paddle 1/32 to 1/64 inch from the face of the switch as shown in *Figure 15a* with the breaker open and the closing spring discharged.

The two switches mounted adjacent to the flywheel *(Figure 15b)* are (1) the spring motor limit switch (SM/LS) which controls the spring charging motor and the anti-pump relay and (2) the closing spring charge switch (52CHG), which prevents operation of the close coil unless the closing spring is charged. These switches should be adjusted in their operated position, closing spring discharged, so that there is 1/64 to 1/32 inch clearance between the roller and the flywheel. Bolts can be loosened to make this adjustment

On the left-hand side is the latch checking switch (52/LCS) which monitors the position of the trip latch *(Figure 15c)*. On some breakers the paddle for this switch is spring steel and requires no adjustment. On those breakers with a rigid paddle the switch should be adjusted so that there is 1/64 to 1/32 inch between the paddle and the switch support.

Slightly above and behind the 52/LCS switch is the negative interlock monitoring switch (52 IL/MS). Please note - this switch is not illustrated below. The IL/MS switch is actuated by the negative interlock. When the breaker is racked between the disconnected and connected positions, the negative interlock roller is depressed. As a result the IL/MS switch is opened and does not allow the motor to charge the closing spring. Once the breaker is fully racked in, the switch closes allowing the spring charge motor to charge the closing spring. This switch should not require any field adjustment, however it can be visually verified that the switch paddle is in contact with the negative interlock actuator throughout its range of travel.

Note: *The only recommended method for tripping the breaker outside of the switchgear cell is by depressing the manual "Push to Trip" button located on the front of the breaker. It is not recommended to use the negative interlock roller as a means of regularly tripping the breaker outside of the switchgear cell.*

Figure 15a Close Latch Monitor Switch

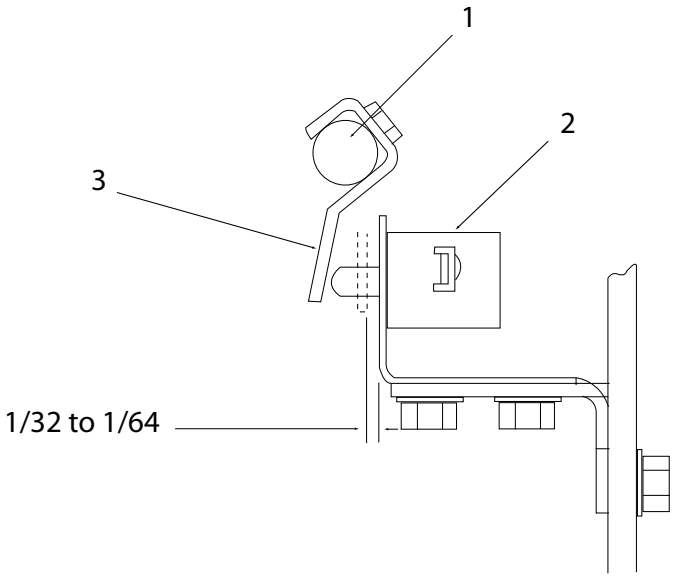

1. *Close Shaft*
2. *Switch Paddle*
3. *Switch*

Figure 15b Spring Motor Limit Switch & 52 Charge Switch

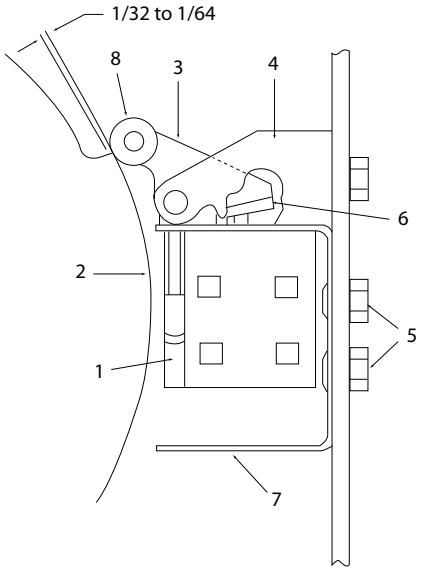

1. *Switch*
2. *Flywheel*
3. *Operating Arm*
4. *Support Bracket*
5. *Switch Adjusting Screws*
6. *Operator*
7. *Support*
8. *Roller*

Figure 15c Latch Checking Switch

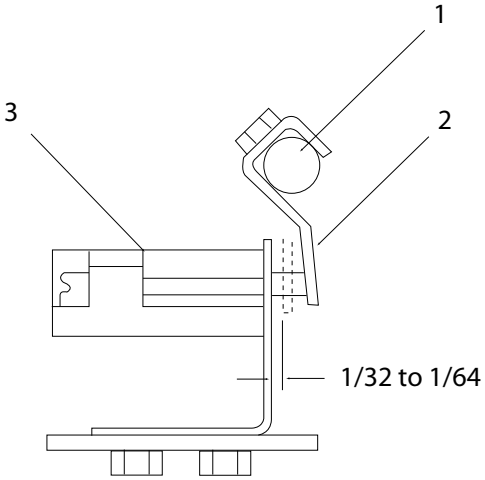

1. *Trip Shaft*
2. *Switch Paddle*
3. *Switch*

Ch 6 Electrical Checks

A. Control Power

Control power for electrical operation of the breaker may be from either an alternating or direct current source. The operating ranges for the closing, tripping and spring charging motor voltages are specified on the breaker nameplate.

If the closed circuit voltage at the terminals of the coil or motor does not fall in the specified range, check the voltage at the source of power and line drop between the power source and breaker.

When two or more breakers operating from the same control power source are required to close simultaneously, the closed circuit voltage at the closing coil or motor of each breaker must fall within the range specified on the breaker nameplate.

B. Timing

Timing may be checked by monitoring the control circuit voltage and by using a low voltage signal through the vacuum interrupter contacts to indicate the closed or open position. Typical time ranges vary with coil voltages but nominal values are:

Initial of trip signal to contact parting

5 cycle breaker	.050 sec max
3 cycle breaker	.025 to .035 seconds

Initiation of close signal to contact closing

standard breaker	.080 sec max
fast bus Xfer breaker	.062 sec max
Instantaneous reclose time*	.128 to .300 sec

* Time from application of trip signal and close signal until breaker opens and recloses

C. Megger®

Since definite limits cannot be given for satisfactory insulation values, megohmeter data should be used to gather trending information only. It should be recorded along with temperature and humidity readings. These data points can then be used to detect any weakening of the insulation from one check period to the next.

The primary circuit insulation on the breaker may be checked phase to phase and phase to ground using a 2500V megohmeter.

To measure the breaker secondary circuit insulation resistance, thread a wire connecting all secondary disconnect pins together except pin #24 (ground pin) and pins 3 & 4 (motor). The measurement may be made by connecting a 500V megohmeter between the wire and ground.

D. High-Potential Test

If high potential tests to check the integrity of the primary insulation is required, the AC high potential test described below is strongly recommended. DC high potential testing is not recommended. The following procedure must be adhered to:

CAUTION

If DC high potential testing is required, the DC high potential machine must not produce peak voltages exceeding 50kV.

Note: *Always recheck with an AC tester if initial results are questionable.*

1) *Primary Circuit*

The breaker should be hipotted with the breaker closed. An AC hipot machine capable of producing the test voltages shown below may be used to hipot the breaker phase to phase and phase to ground.

Table B AC Hipot Voltages	
Breaker Voltage	**AC Test Voltage**
4.76kV	15kV
8.25kV	27kV
15.0kV	27kV

The machine should be connected with its output potential at zero and the voltage increased at 500 volts per second to the test voltage and that voltage maintained for 60 seconds. The voltage should then be returned to zero and the test leads removed from the circuit and the breaker discharged to ground.

Note: *Do not exceed the test voltage indicated for applicable breaker voltage rating. If the test should experience a failure, STOP, turn off the test set and discharge the breaker circuit.*

1. *Check the test set up and leads for connection errors.*
2. *Wipe down the breaker to remove any moisture, dust and contamination.*
3. *Retest the breaker at the proper test voltage.*

2) *Secondary Circuit*

Prior to hipotting the breaker secondary circuit, disconnect the motor leads and thread a wire connecting all secondary disconnect pins, except #24, the ground pin. Connect the hipot machine form this wire to ground. Increase the voltage to 1125V (rms) 60Hz and maintain for 60 seconds. Reduce the voltage to zero and remove the hipot machine from the circuit. Remove the wire connecting the secondary disconnect pins and reconnect the motor leads.

3) *Primary Circuit Resistance*

A resistance check of the primary circuit may be made with the breaker closed. Use a low resistance measuring instrument rated 100 amperes which measures in microhms. The 100 ampere reading should not exceed 100 microhms when connected across the primary studs on the breaker side of the disconnect fingers. Do not connect directly to the disconnect fingers as errors may occur due to finger spring pressure.

4) Vacuum Interrupter Integrity Test

NOTICE

Use of DC hipot is not recommended, but can be used for quick field checks only. DC testers frequently yield false negative test results due to the capacitive component of the vacuum interrupter during the DC testing. In addition, most lightweight DC testers have a very low leakage current trip setting. Always recheck with an AC tester if initial results are questionable. Prior to performing any vacuum interrupter integrity test, the outside (external surface) of the vacuum interrupters should be wiped clean of any contaminates with a nonlinting cloth or industrial type wiper. This is critical: the entire external surface is to be completely free of all dirt, debris, dust, oil, etc.

⚠ CAUTION

X-radiation will be produced if an abnormally high voltage is applied across a pair of electrodes in a vacuum. X-radiation will increase as voltage increases and/or as contact separation decreases. Only test a correctly adjusted circuit breaker.

During a high potential or vacuum integrity test, any X-radiation which may be produced will not be hazardous at a distance safe for high potential testing, if the test is conducted at the recommended voltage and with the normal open circuit breaker gap.

Do no apply voltage that is higher than the recommended value. Do not use contact separation that is less than the recommended open position breaker contact gap.

A vacuum integrity test of the interrupter is required to ensure that no loss of vacuum has occurred. The vacuum integrity test is performed using an AC hi-potential tester. This test of the vacuum interrupter will determine its internal dielectric condition and vacuum integrity. With the breaker open, individually check each interrupter by connecting the hi-pot machine "Hot" lead to the primary bus bar and the ground lead to the load side bus bar. If the machine has a center point ground, the connections can be made either way. Apply minimum of 25kV (rms) 60Hz at 500vps and hold for 10 seconds. If no breakdown occurs, the interrupter is in acceptable condition. After the high potential voltage is removed, discharge any electrical charge that may be present through the internal ground of the test machine or by a grounded cable to one of the phase bus bars.

If failure of a vacuum bottle should occur during the integrity test, the test procedure should be reviewed and the pole piece cleaned.

Note the voltage level at failure on the first test, and retest the phase pole piece. If the pole piece passes test, the vacuum bottle is acceptable - STOP. If the test fails again at a higher voltage level than was observed in the first test, clean the pole piece and retest. If a failure on the integrity test occurs a third time, consider the vacuum bottle to have lost vacuum and replace the complete pole piece.

⚠ CAUTION

Many DC high potential machines are halfwave rectifiers. This type of hipot tester must not be used to test vacuum interrupters. The capacitance of the Power/Vac bottles is very low and the leakage in the rectifier and its DC voltage measuring equipment is such that the pulse from the halfwave rectifier may be in the neighborhood of 120kV when the meter is actually reading 40kV. In this case, some perfectly good bottles can show a relatively high leakage current since it is the peak voltage of 120kV that is producing erroneous bottle leakage current. In addition, abnormal X-radiation will be produced.

Although an AC high potential test is recommended for checking the vacuum integrity, a DC high potential test can also be conducted on the vacuum interrupter. If a DC hipot test set is to be used, test voltage should not exceed 50kVDC, and should be applied for 10 seconds. Interrupters must be cleaned as previously discussed. If failure occurs, reverse the polarity retest. If the interrupter passes the second test, STOP. The interrupter is acceptable. If the interrupter fails the second test, it is recommended a final test with an AC hipot before replacement.

No attempt should be made to try to compare the condition of one vacuum interrupter with another nor to correlate the condition of any interrupter to low values of DC leakage current. There is no significant correlation. After the high potential voltage is removed, discharge any electrical charge that may be retained.

5) High Voltage Insulation Integrity

The primary circuit insulation on the breaker may be checked phase-to-phase and phase-to-ground using a 2500V or other suitable megohmeter.

Since definite limits cannot be given for satisfactory insulation values, a record should be kept of the megohmeter readings as well as temperature and humidity readings. This record should be used to detect any weakening of the insulation from one check period to the next. Generally, readings should equal or exceed 10,000 megohms.

To measure the breaker secondary circuit insulation resistance, disconnect the motor leads and thread a wire connecting together all secondary disconnect pins except #24, the ground pin. The measurement is made by connecting a 500V megohmeter from the wire to ground.

Ch 7 Maintenance

A. General

Power/Vac® circuit breakers have been designed to be as maintenance free as practicable. They include features such as sealed vacuum interrupters and long life synthetic greases which contribute to many years of trouble free performance with a minimum amount of maintenance attention.

B. General Service Conditions

The frequency of required maintenance depends on the severity of the service conditions of the switchgear application. If the service conditions are mild the interval between maintenance operations may be extended to 10 years or 10,000 no load or normal load switching operations.

Mild service conditions are defined as an environment in which the switchgear is protected from the deleterious effects of conditions such as:

- Salt Atmosphere
- Changes in temperature that produce condensation
- Conductive and/or abrasive dust
- Damaging chemicals and fumes
- Vibration or mechanical shock
- High relative humidity (<90%)
- Temperature extremes (<-30°C, >40°C)

C. ML-17H Service Conditions

The ML-17H is a very high energy breaker which opens and closes with significant impact. Although vibration resistant designs have been incorporated, it is recommended to visually inspect the breaker after each thousand operations, with a particular emphasis on tightness of the fastening hardware. This would include the auxiliary switch adjustment cap screws which must be re-tightened using Loctite® #271 if they are loosened for any reason.

D. Fault Interruptions

The erosion rate of the primary contacts in the vacuum interrupters is very low for no load and normal load switching operations. However, fault current interruptions at or near the breaker rating may result in appreciable contact erosion. With frequent fault interruptions it is necessary to perform maintenance based on the number of interruptions. After each 15 fault interruptions the following should be performed:

1. Contact erosion per *Ch 5 Mechanical Checks and Adjustments, G. Primary Contact Erosion Indication*.
2. Wipe and gap per *Ch 5 Mechanical Checks and Adjustments, F. Wipe and Gap Adjustment*.
3. Vacuum interrupter integrity test per *Ch 6 Electrical Checks, D. High Potential Test, 4) Vacuum Interrupter Integrity Test*.

E. Recommended Maintenance

The following operations should be performed at each maintenance:

1. Perform a visual inspection of the breaker. Check for loose or damaged parts.
2. Perform the slow closing operation described in *Ch 5 Mechanical Checks and Adjustments, B. Slow Closing Operation*.
3. Check the erosion indicator and the wipe and gap as described in *Ch 5 Mechanical Checks and Adjustments, F. Wipe and Gap Adjustment* and *G. Primary Contact Erosion Indication*.
4. Perform the vacuum interrupter integrity test as described in *Ch 6 Electrical Checks, D. High Potential Test, 4) Vacuum Interrupter Integrity Test*.

5. Lubricate the breaker operating mechanism as described in *Ch 7 Maintenance, F. Lubrication*.
6. Check the electrical operation using the test cabinet (if available) or the test position in the metal-clad switchgear.
7. Examine the movable contact rod of the vacuum interrupter. With the breaker open, wipe the lubricant off the rod and examine the silver surface. The rod should have a burnished appearance without copper appearing through the silver. If copper is visible at more than one location per pole, or if the silver plating is torn, the interrupter assembly should be replaced. Relubricate movable contact rod with 0282A2048P009 grease.
8. If desired, perform the additional electrical tests of *Ch 4 Installation, H. Electrical Checking*.

F. Lubrication

Proper lubrication is important for maintaining reliable circuit breaker performance. The Power/Vac® mechanism uses bearings which have a synthetic lining in some locations. These bearings do not require lubrication to maintain low friction, but lubrication does not harm them and oiling lightly is recommended. Sleeve bearings are used in some linkage locations and needle or roller bearings are used for low friction on the flywheel, trip shaft, and close shaft.

Providing a fresh lubricant supply at periodic intervals is helpful in extending the useful life of the breaker mechanism especially where frequent operation may have forced lubricant out of the bearing surfaces. Use Mobile 29 (black grease) 0282A2048P005 on all mechanical bearings and sliding surfaces in the Power/VAC mechanism. This grease contains extreme pressure (EP) additives to improve its load bearing capability. Use the standard red grease on all other applications, such as the primary current disconnect fingers as described in the following.

Electrical primary contact surfaces also require periodic lubrication to inhibit oxidation and minimize friction. At each inspection and maintenance interval, do the following:

1. Metal contact surfaces such as the movable contact rod of the interrupter should be lubricated with 0282A2048P009 grease. This grease is available packaged in 4oz collapsible tubes.
2. Silvered primary contact surfaces. Wipe clean and apply a light coat of 0282A2048P009 grease on primary disconnect fingers.
3. Pins of the secondary disconnect coupler should be lightly coated with 0282A2048P009 grease.

Care should be taken to ensure that the grease is only applied to the pins and not the body of the secondary coupler.

Ch 8 Recommended Renewal Parts and Replacement Procedures

A. Recommended Spare Parts

It is recommended that sufficient spare parts be carried in stock to enable the prompt replacement of any worn, broken or damaged part. A stock of such parts minimizes service interruptions caused by breakdowns and saves time and expense. When continuous operation is a primary consideration, more renewal parts should be carried, the amount depending on the severity of the service and the time required to secure replacements.

Spare or replacement parts which are furnished may not be identical to the original parts, since improvements are made from time to time. The parts which are furnished, however, will be interchangeable. *Table C* lists the recommended spare parts to be carried in stock by the user. The recommended quantity is not specified. This must be determined by the user based on the application.

B. Repair Parts

The following tables list the replacement parts for the Power/Vac® breaker which may be installed by a skilled mechanic using commonly available hand tools. It is not recommended that a stock of these parts be carried since their expected life is in general independent of the severity of the application and exceeds the expected useful lifetime of the breaker.

In the event that it is necessary to replace a component not listed in either *Table C* or the *Replacement Parts Bulletin*, contact Powell for recommendations.

C. Ordering Instructions

1. Always specify complete nameplate data including:
   a. Type
   b. Serial Number
   c. Rated Voltage
   d. Rated Amperes
   e. Impulse Withstand
   f. Interrupting Time
   g. Interrupter Type
   h. Control Voltage (if applicable)

2. Specify the quantity, catalog number, and description of each part ordered.

Table C Recommended Spare Parts for Power/Vac® Breakers with ML-17 Mechanism

Number Required per Breaker	Model Designator	Description	Catalog Number
Spring Charge Motor			
1	4	48VDC	0177C2164G003
		125VDC & 120VAC	0177C2164G001
		250VDC & 240VAC	0177C2164G002
Anti Pump (52Y) Relay			
1	4, Rev 1	48VDC	0282A2008P021
		125VDC	0282A2008P022
		250VDC	0282A2008G021
		120V, 50/60Hz	0282A2008P023
		240V, 50/60Hz	0282A2008P024
Potential Trip Coil (5 cycle)			
1 or 2 as required	All	48VDC	0282A2009P007
		125VDC	0282A2009P008
		250VDC	0282A2009P009
Potential Trip Coil (3 cycle)			
1 or 2 as required	All	48VDC	0282A2009P007
		125VDC	0282A2009P002
		250VDC	0282A2009P003
Closing Coil (STD)			
1	All	48VDC	0282A2009P001
		125VDC	0282A2009P002
		250VDC	0282A2009P003
		120VAC	0282A2009P004
		240VAC	0282A2009P005
Closing Coil (FBT)			
1	All	48VDC	0282A2009P014
		125VDC	0282A2009P001
		250VDC	0282A2009P002
		240VAC	0282A2009P004
Undervoltage Trip Device			
1	All	48VDC	0282A5218G001
		125VDC	0282A5218G002
0 *		250VDC	0282A5218G003
2	All	Control Switch, Normally Open	0282A2097P003
1 or 2 **	All	Control Switch, Normally Closed	0282A2097P002
1	4, Rev 1	Auxiliary Switch	0209B3410P003

* Only for breakers originally furnished with UV trip device
** Also used for Fast Bus Transfer contact on those breakers with note "*" on nameplate

For replacement interrupter pole assemblies, please record the serial number and rating information from the breaker data nameplate and contact the factory for pricing.

NOTICE

Replacing a vacuum interrupter or pole assembly with an aftermarket unit that has not been qualified and approved by Powell will void any existing warranty, and is done so at the risk of the end user.

Table D Spare Primary Disconnect Contact Finger Assemblies (by rating)

Breaker Class	Continuous Current (Amperes)	Model Designator	Catalog Number	Quantity per Breaker
4.76kV - 31.5kA	1200	4	0282A2701G001	6
	2000		0282A2700G002	
	1200/2000		0282A2834G002	
	3000		0282A2702G001	
	3500		0282A7597G001	
	4000		0282A7597G001	
4.76kV - 40kA	1200	4	0282A2701G001	6
	2000		0282A2700G002	
	3000		0282A2702G001	
	3500		0282A7597G001	
	4000 (force cooled)		0282A7597G001	
4.76kV - 50kA	1200	4	0282A2700G001	6
	2000		0282A2700G002	
	3000		0282A2702G001	
	3500		0282A7597G001	
	4000 (force cooled)		0282A7597G001	
4.76kV - 63kA	1200	4	0209B4272G001	6
	2000		0209B4272G002	
	3000		0282A7597G001	
	3500		0282A7597G001	
	4000 (force cooled)		0282A7597G001	
8.25kV - 40kA	1200	4	0282A2701G001	6
	2000		0282A2700G002	
	3000		0282A2702G001	
	3500		0282A7597G001	
	4000 (force cooled)		0282A7597G001	
8.25kV - 50kA	1200	4	0209B4272G001	6
	2000		0209B4272G002	
	3000		0282A7597G001	
	3500		0282A7597G001	
	4000 (force cooled)		0282A7597G001	
8.25kV - 63kA	1200	4	0209B4272G001	6
	2000		0209B4272G002	
	3000		0282A7597G001	
	3500		0282A7597G001	
	4000 (force cooled)		0282A7597G001	
15kV - 20kA	1200	4	0282A2725G001	6
	2000		0282A2700G002	
	1200/2000		0282A2834G002	
	3000		0282A2702G001	
	3500		0282A7597G001	
	4000 (force cooled)		0282A7597G001	

Table D Spare Primary Disconnect Contact Finger Assemblies (by rating) (continued)				
Breaker Class	**Continuous Current (Amperes)**	**Model Designator**	**Catalog Number**	**Quantity per Breaker**
15kV - 25kA	1200	4	0282A2725G001	6
	2000		0282A2700G002	
	1200/2000		0282A2834G002	
	3000		0282A2702G001	
	3500		0282A7597G001	
	4000 (force cooled)		0282A7597G001	
15kV - 31.5kA	1200	4	0282A2701G001	6
	2000		0282A2700G002	
	1200/2000		0282A2834G002	
	3000		0282A2702G001	
	3500		0282A7597G001	
	4000 (force cooled)		0282A7597G001	
15kV - 40kA	1200	4	0282A2701G001	6
	2000		0282A2700G002	
	3000		0282A2702G001	
	3500		0282A7597G001	
	4000 (force cooled)		0282A7597G001	
15kV - 50kA	1200	4	0209B4272G001	6
	2000		0209B4272G002	
	3000		0282A7597G001	
	3500		0282A7597G001	
	4000 (force cooled)		0282A7597G001	
15kV - 63kA	1200	4	0209B4272G001	6
	2000		0209B4272G002	
	3000		0282A7597G001	
	3500		0282A7597G001	
	4000 (force cooled)		0282A7597G001	

D. Repair and Parts Replacement Procedures

1) *General*

The repair and parts replacement procedures which follow assume that the work is being performed by skilled personnel knowledgeable of the details of the mechanism and the principles of its operation and the safety precautions applicable to each operation. The breaker mechanism contains powerful springs containing sufficient stored energy to cause severe injury if released unexpectedly or in an uncontrolled manner.

⚠ CAUTION

All repair work on the mechanism should be performed with the breaker open and the closing spring discharged except as specifically required by the following procedures.

When it is necessary to work on a breaker with the closing spring charged, it should be gagged to prevent inadvertent closing.

In some of the procedures which follow it is necessary to tilt the breaker on its side to gain the required access. This should be done carefully by two or more persons to assure that the breaker is not damaged and that no one is injured by allowing it to fall.

⚠ CAUTION

The breaker should be opened and the closing spring discharged before placing it on its side since the negative (if tipping on the left side) or the spring discharge (if tipped on right side) interlock may be actuated causing the breaker to either trip or close unexpectedly.

⚠ CAUTION

Do not work under a suspended breaker, only when the breaker is on a lift truck.

In the parts replacement procedures which follow only the disassembly procedure is given unless specific operations are required in the reassembly. With no instructions to the contrary, reassembly is to be performed in the reverse order of the disassembly.

Some repairs will affect the operation of other sections of the mechanism. It is of utmost importance that following a repair that the adjustments and tests specified in the repair procedures be performed to assure that the breaker will operate as intended when it is returned to service.

NOTICE

The nameplate containing the breaker rating and serial information is located on the removable front cover. Many maintenance and repair procedures require removal of the front cover. The serial number is also attached to the right side breaker frame between the track rollers on an engraved metal plate. Verify that the serial number on the removable front cover matches the number affixed to the frame before reassembly.

2) *Pin Retaining Rings*

Pin retaining rings *(Figure 16)* are used in a number of places throughout the mechanism to retain pins and shafts. Reuse of retaining rings is NOT recommended. The retaining rings are removed by squeezing the "removal" ears together using standard pliers. To install a new retaining rings insert it into the groove and squeeze the "installation" ears to within 1/16" of each other.

Figure 16 Pin Retaining Rings

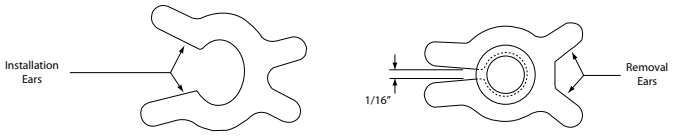

3) *Front Angle Plate and Charge/Discharge Flag Operating Rod*

Many mechanism repairs require removal of the front angle plate for access. The charge/discharge flag operating rod is removed in the process of removing the front angle plate.

With the breaker open and the closing spring discharged, remove the breaker front cover. Disconnect the spring from the operation counter. Remove ten bolts holding the front angle plate to the mechanism frame. Remove the 3 sheet-metal wire covers below each vacuum interrupter assembly. Carefully swing the left side of the front angle plate away from the mechanism to disconnect the charge/discharge flag operating rod from the flag. Disconnect the other end of the rod from the spring charge indicator arm.

Figure 17 Power/Vac® Circuit Breaker with Front Angle Plate Removed

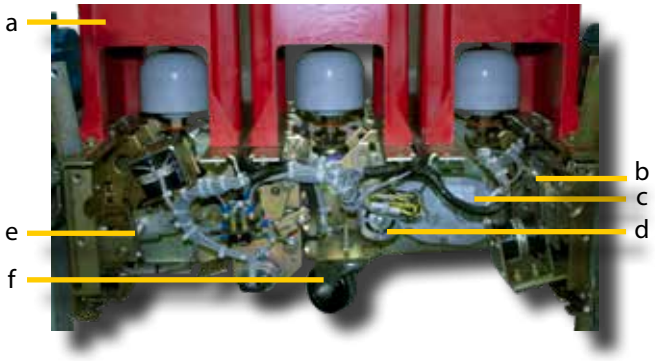

a. Interrupter Supports
b. Close Shaft
c. Clutch Assembly
d. Gear Motor
e. Trip Shaft
f. Swivel Caster

4) *Clutch Assembly*

With the front angle plate removed the clutch assembly *(Figure 17, c)* may be slipped off the manual drive shaft of the gear motor.

5) *Operations Counter*

The operations counter is removed by removing the two bolts connected to the swivel caster bracket and disconnecting the counter spring.

6) *Swivel Caster*

Remove the front angle plate and the operations counter. The swivel caster *(Figure 17, f)* may be removed by removing the bolt holding it to the breaker frame.

7) *Coupling Clamps*

To remove the coupling clamp *(Figure 18, b)* which connects the operating rod to the vacuum interrupter, close the breaker and remove the two screws which hold the two halves of the coupling clamp together. When reinstalling, torque the two clamp screws to 10 to 12 ft-lbs.

8) *Replacement of Interrupter Assemblies*

Interrupters are supplied as complete pole units which include the vacuum interrupter mounted in the interrupter support. The primary studs with disconnect fingers are part of the interrupter assemblies.

⚠ CAUTION

Do not attempt to remove or reinsert the vacuum interrupter in the interrupter support assembly. Special tools available only at the factory are required.

a. Close the breaker and remove the coupling clamp *(Figure 18, b)*. Open the breaker and remove the four bolts holding the pole assembly to the mechanism and remove the old pole assembly.
b. Set the new pole assembly in place and install the four mounting bolts, torquing them to 23 ft-lbs. Set the pole assembly so that the distance between the primary studs and the studs on the adjacent pole assembly are 10" apart.
c. Close the breaker using the Slow Closing Operation as described in *Ch 5 Mechanical Checks and Adjustments, B. Slow Closing Operation*. Perform the closing operation slowly while guiding the tip of the operating rod into the base of the movable contact rod *(Figure 18, c)* on the vacuum interrupter. After the breaker is fully closed, install the coupling clamp.
d. Check and adjust the erosion indicator per *Ch 5 Mechanical Checks and Adjustments, G. Primary Contact Erosion Indication* (if new interrupter assembly is installed), and the Wipe and Gap adjustment as described in *Ch 5 Mechanical Checks and Adjustments, F. Wipe and Gap Adjustment*.
e. Perform the Vacuum Interrupter Integrity test as described in *Ch 6 Electrical Checks, D. High Potential Test, 4) Vacuum Interrupter Integrity Test*.
f. Check primary stud wipe. (Refer to the Breaker Installation and Removal section in GEK 39672, Instructions and Recommended Parts for Maintenance).

⚠ CAUTION

The primary stud wipe can only be checked when the switchgear is deenergized.

9) *Primary Disconnect Contact Assembly (not applicable to 3000A)*

Primary disconnect fingers may be removed by removing the two roll pins which hold them in place on the primary studs.

Coat the new primary disconnect fingers with 0282A2048P009 grease at the contact surfaces.

CAUTION

Do not twist the movable end of the vacuum interrupter. This could cause loss of vacuum integrity.

10) Operating Rod

To remove the operating rod *(Figure 18, c)* close the breaker, remove the coupling clamp and trip (open) the breaker. The operating rod is then removed by loosening the lock nut *(Figure 18, f)* and unscrewing it from the wipe spring assembly.

Figure 18 Operating Rod Rear View

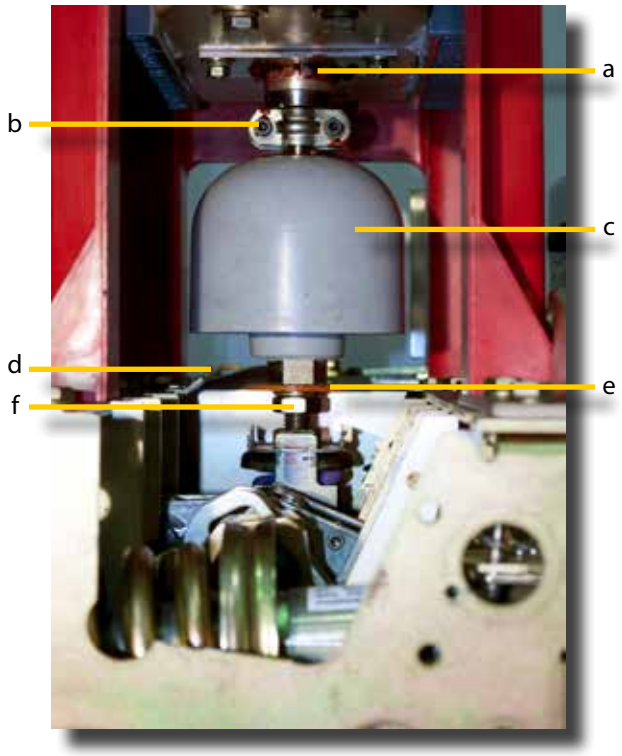

a. Movable Contact Rod of Vacuum Interrupter
b. Coupling Clamp
c. Operating Rod
d. Erosion Indicator Reference Arm
e. Erosion Disc
f. Locknut

To reinstall, screw the operating rod on the wipe spring assembly and adjust the distance between the top of the operating rod and the bottom of the movable contact rod, to the gap required for the breaker as shown in *Table E Gap Required*.

Table E Gap Required

Interrupter Type	Gap
45A	.375 to .425
46A	
47A	
48A	
49A	
68A	.450 to .550

Lock the operating rod in its initially adjusted position by tightening the locknut *(Figure 18, f)* against it. Slow close the breaker as described in *Ch 5 Mechanical Checks and Adjustments, B. Slow Closing Operation*. Guide the tip of the operating rod into the recess in the bottom of the vacuum interrupter movable contact while the breaker is being slow closed.

Install the coupling clamps. Check and readjust the breaker gap and wipe as described in *Ch 5 Mechanical Checks and Adjustments, F. Wipe and Gap Adjustment*.

11) Control Switches

Control switches may be removed from their mounting brackets by disconnecting the wires and removing the two mounting screws. Use a small screwdriver to remove and replace the switch on the bracket checking that the correct type, normally open or normally closed, is used. Reinstall wire and adjust per *Ch 5 Mechanical Checks and Adjustments, I. Control Switches*.

12) Gear motor Limit Switch Operator

With the breaker open and the closing spring discharged, remove the bolts that hold the gear motor switch assembly and the switch operator *(Figure 15b)* to the breaker side frame. Lower the switch assembly and maneuver the operator out through the breaker mechanism.

After reassembling adjust the switch as described in *Ch 5 Mechanical Checks and Adjustments, I. Control Switches* and check electrical operation of the breaker in the test position in the metal-clad switchgear.

13) Trip or Close Coil

Remove the breaker front plate to gain access to the trip *(Figure 19)* or close coils *(Figure 20)*. To replace trip or close coils, cut wires at the butt connection *(Figure 19, f)*, loosen the coil bracket bolt closest to the plunger and remove the other bracket bolt. Pivot the bracket and remove the coil. Drive out the pole piece and install in the new coil. Slide the new coil over the plunger and into the bracket on the plunger end. Pivot the other bracket into position, locate so the plunger does not bind and torque the bolts to 20-25 ft-lbs. Butt connect the wiring, check adjustment and electrical and mechanical operation. Check that the location of the coil wires is not such that they may interfere with mechanical operation. Use wire ties if necessary to make sure the wires are out of the way.

Figure 19 Trip Coil

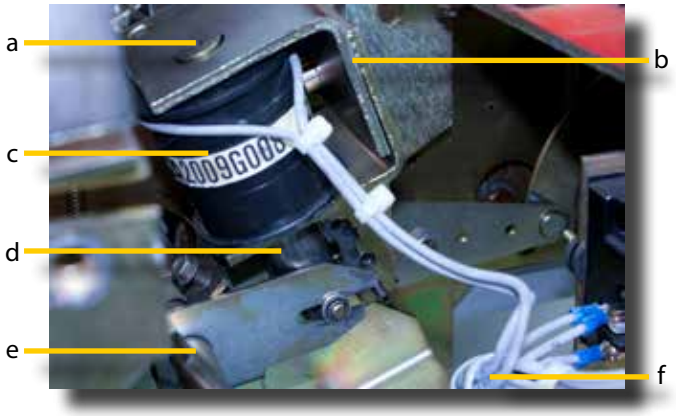

a. Pole Piece
b. Mounting Bracket
c. Coil
d. Plunger
e. Trip Shaft
f. Butt Connectors (shown in wiring harness)

Figure 20 Close Coil

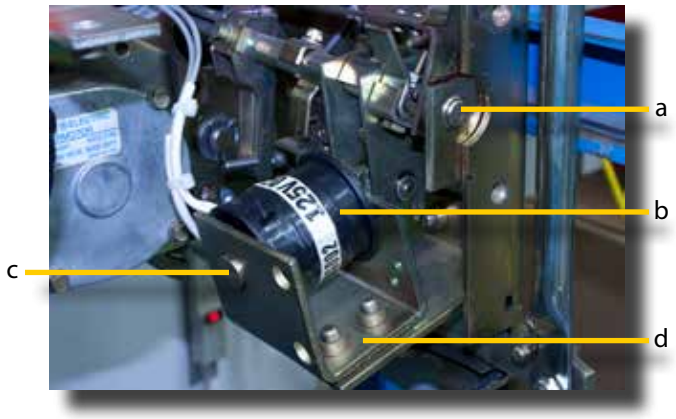

a. Close Shaft
b. Coil
c. Pole Piece
d. Mounting Bracket

14) Secondary Disconnect Block and Pins

To remove the secondary (control power) disconnect block, extend the secondary disconnect handle and remove the nuts *(Figure 21)* from the two secondary disconnect guide pins. Remove the control wiring from the secondary disconnect block using the Pin removal tool (453300-1 from AMP, Inc).

Note: *If pin removal tool is not available use a female pin socket with the retainer tabs flattened or removed to remove the male pins from the breaker side of the secondary disconnect. If replacing the female pins (equipment side of disconnects) the pin removal tool must be used.*

To replace the pin(s) on the control wiring cut the old pin off and strip the wire approximately ¼ inch and install new pin using crimping tool. Insert the pin into the disconnect block by pushing it into its receptacle until the engagement tabs on the pin spring out to retain the pin firmly in the block.

Figure 21 Secondary Disconnect

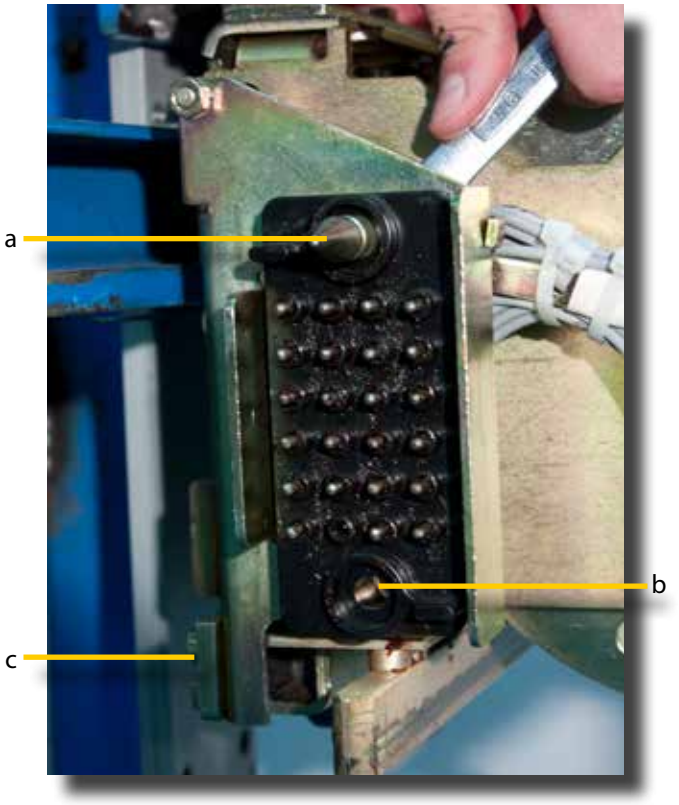

a. Guide Pin
b. Guide Pin Hole (pin removed)
c. Secondary Disconnect Handle Mounting Bolts

15) Wiring Harness

To replace the entire secondary control wiring harness the following steps are required:

a. Remove the pins from the secondary disconnect block. Cut all wire ties that hold the harness to the breaker frame. Remove the front angle plate and cut the wires to the trip coil, close coil, and gear motor (or disconnect at terminal block if installed). Disconnect the wires from each of the control switches and the anti-pump relay. When removing wires note the position of each wire on the control switches so that when new harness is installed the wiring will be correct.

b. Install new wiring harness being careful to install the correct wire number to the proper location on the control switches.
c. After the new harness is installed perform a continuity check of each of the control circuits and auxiliary switch contacts at the secondary disconnect with the breaker opened and closed. Check the operation of the breaker electrically before returning the breaker to service.

16) Secondary Disconnect Handle

To remove the secondary disconnect handle remove the two bolts *(Figure 21, c)* which connect it to the secondary disconnect assembly at the rear of the breaker. With the bolts removed, pull the handle down and out through the front of the breaker.

17) Anti-Pump Relay (52Y)

Remove the breaker front plate to gain access to the 52Y relay. Remove the wires to the 52Y relay *(Figure 22, c)*. Remove the relay by removing the two bolts which hold it to the mounting plate.

Install the new relay in the reverse order. Check that the normally open and normally closed contacts are wired as shown on the schematic. (The positions of the NO and the NC contacts may be reversed on the new relay depending on the relay type supplied.)

Check the operation of the 52Y relay by closing the breaker electrically and maintaining the close signal while tripping the breaker manually after the spring charging motor has completed its charging cycle. If the breaker does not reclose, the 52Y relay functioned properly.

Figure 22 Electrical Components - Front View with Front Angle Plate Removed

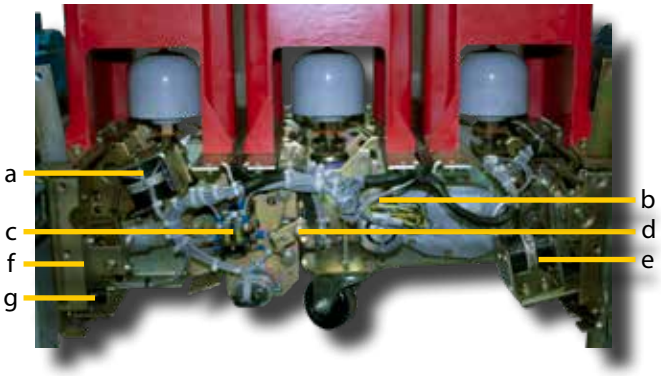

a. 52TC (Trip Coil)
b. Spring Charging Motor
c. 52Y (Anti Pump Relay)
d. 52 (Auxiliary Switch)
e. 52X (Close Coil)
f. 52LCS (Latch Checking Switch)
g. 52IL/MS (Negative Interlock Monitoring Switch)

18) Spring Charging Motor, Spline Adapter and Wind Shaft Drive Pin

With the closing spring discharged and the breaker open, remove the breaker front angle plate to gain access to the spring charging motor *(Figure 23)*.

Cut the two motor leads at the butt connectors (or remove the motor leads from the terminal block if installed). Remove the four bolts holding the motor bracket to the breaker frame. Withdraw the spring charging motor and mounting bracket from the breaker.

Examine the spline adapter *(Figure 23, e)* that the output shaft of the motor engages. If the spline adapter is damaged, remove it by removing the "star retainer" and the wind shaft drive pin.

Note: *To gain access to the "star retainer" the phase 3 interrupter assembly and phase 3 wire cover must be removed.*

Remove the spring charging motor from the adapter plate and reinstall the new motor in the reverse order.

Figure 23 Spring Charge Motor

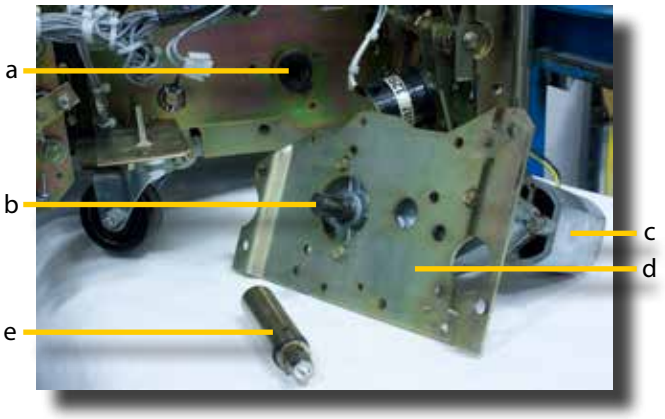

a. Spline Adapter Hole
b. Output Shaft
c. Gear motor Assembly
d. Motor Bracket
e. Spline Adapter

19) Auxiliary Switch (52 Aux Switch)

Remove the breaker front cover, and Y relay mounting plate and the front caster wheel for access to the auxiliary switch. Remove the wires and metal jumpers from the auxiliary switch *(Figure 24)*.

Note: *Check the position of the linkage of the auxiliary switch because it must go back in the same position or the switch will not operate properly. A "v" notch is on the end of the auxiliary switch shaft for reference.*

Loosen the clamp bolt on the rear shaft of the auxiliary switch and remove the two bolts, *(Figure 24, a)* which mount the switch to the breaker frame to remove the switch.

Install the new switch in reverse order.

Refer to *Figure 25* to check the switch adjustment. Adjustment is made by loosening the two bolts in the switch drive arm *(Figure 24, d)*. Check that the "A"* contacts are closed when the breaker is closed and the "B"** contacts are closed when the breaker is open.

* "A" contacts are closed when the breaker is closed - for example B1 and B3 are closed when breaker is closed and there should be continuity between pins 9 and 10 on the secondary disconnect.

** "B" contact are closed when the breaker is open - for example A1 should be closed when breaker is open and there should be continuity between pins 1 and 21 on the secondary disconnect.

Figure 24 52 Auxiliary Switch

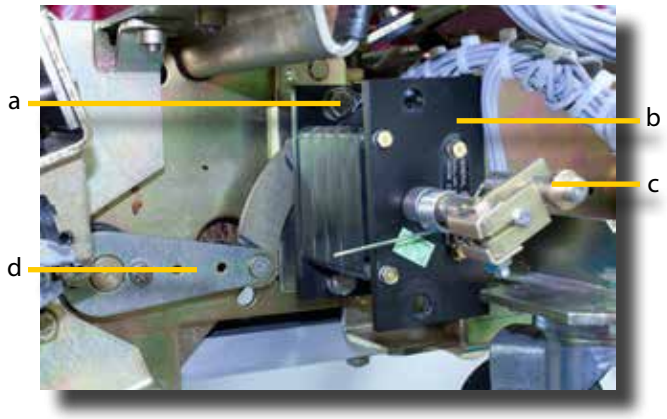

a. Mounting Bolt
b. Auxiliary Switch
c. Indicator Drive Arm
d. Switch Drive Arm

Figure 25 Auxiliary Switch Adjustment

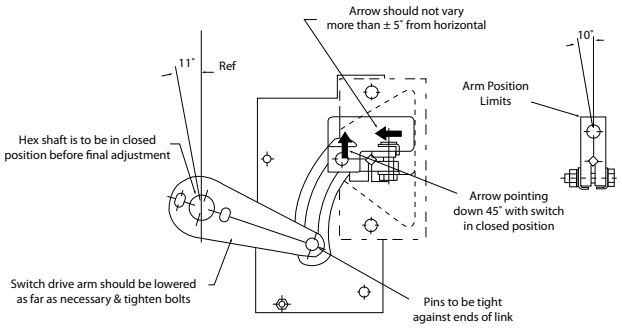

20) Flywheel Brake

To remove the brake, remove the brake clamp *(Figure 26, e)* that holds the brake assembly to the pullrod and then remove the two bolts that mount the brake to the flywheel block. Reinstall the new brake in the reverse order.

Check that the brake is not binding against the flywheel by operating the breaker several times (25 open/close operations recommended). Binding will be indicated if the brake holds the flywheel in a position that prevents the wind pawl from engaging the wind hub. If binding occurs it can be corrected by using a pry bar between the brake and the flywheel to spring the brake mounting bracket away from the flywheel.

Figure 26 Flywheel Brake

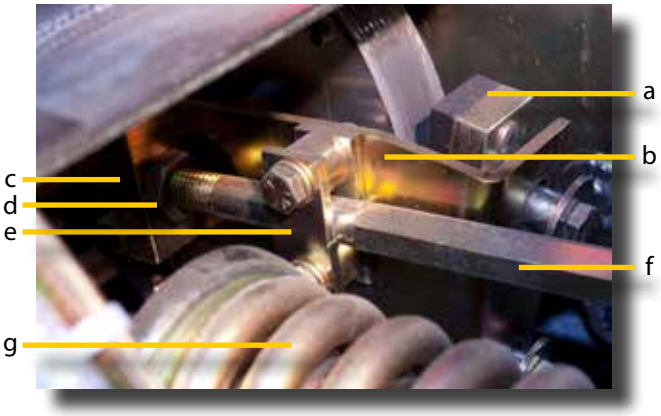

a. Brake Pad
b. Brake Mounting Bracket
c. Flywheel Block
d. Pullrod Jam Nut
e. Brake Clamp
f. Pullrod
g. Closing Spring

Figure 27 Pull Rod

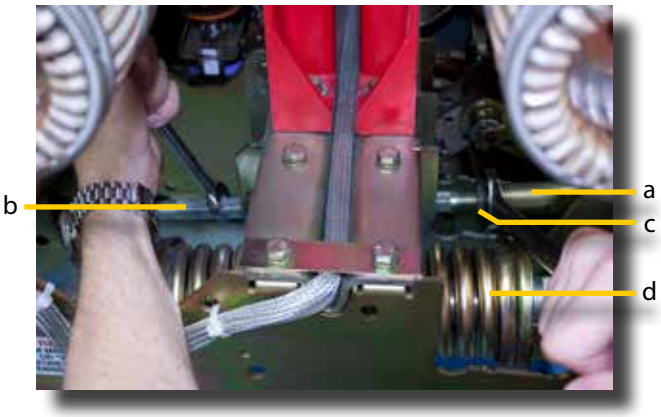

a. Coupling
b. Pullrod
c. Jam Nut
d. Closing Spring

21) Pull Rod

Charge and gag the closing spring and press the manual close push button. Remove the flywheel brake assembly *(see Ch 8 Recommended Renewal Parts and Replacement Procedures, D. Repair and Parts Replacement Procedures, 20) Flywheel Brake)*. The pull rod is a turn buckle arrangement with right hand threads on one end and left hand on the other. Loosen the jam nuts *(Figure 26, d* and *Figure 27, c)* on each end of the pull rod and remove the pull rod by unscrewing it. Remove the jam nuts and install them on the new pull rod. Install the new pull rod and screw both ends in simultaneously. Set the length of the pull rod initially to approximately 13 $^{11}/_{16}$ inch between the flywheel block *(Figure 26, c)* and the coupling *(Figure 27, a)* attached to the adjustable throw transfer crank. Adjust the pull rod length as described in *Ch 5 Mechanical Checks and Adjustments, C. Pull Rod Adjustment*.

22) Dashpot

With the breaker open and discharged, remove the operating rod and the erosion indicator reference arm below the center pole assembly. Remove the two set screws in the top of the dashpot mounting bracket and pull out the mounting pins which connect the mounting block to the breaker frame. Remove the X-washers from the pin which holds the bottom of the dashpot to the phase #1 bell crank. Push the pin out through the access hole in the frame member.

Install the new dashpot in the reverse order. Recheck the wipe and gap on phase 2.

Note: *The following velocity check is not required but may be performed if desired.*

Check that the velocity of the mechanism during tripping is acceptable by attaching a position transducer to the tapped hole in the opening stop bolt on the horizontal bar. Monitor the open/close operation of the primary contacts with low voltage leads across the primary studs. Trip the breaker and record the position of the horizontal bar as a function of time. Determine the average velocity of the horizontal bar during the first 75% of travel following primary contact parting. The velocity in this interval should be between 50 and 100 inches per second. Check the amount of mechanism rebound by examining the travel curve and recording the minimum gap, b. This distance should be equal to or greater than 75% of the full open gap, a. as illustrated in *Figure 28*.

Figure 28 Velocity and Rebound Check

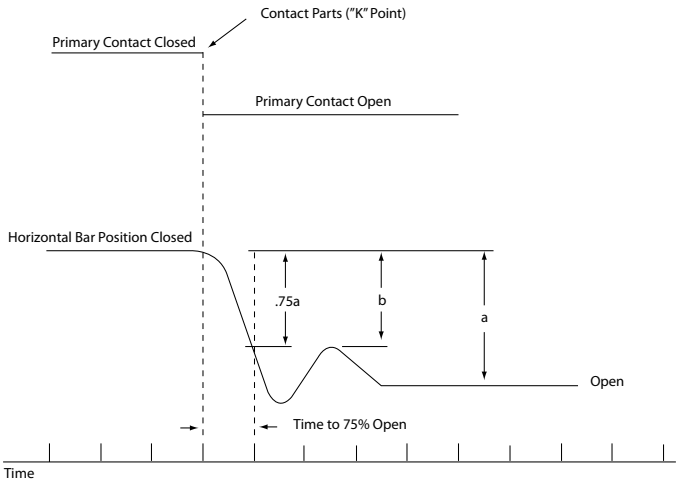

a - Measured distance between open and closed on graph
g - Measured gap of phase 1 interrupter
t - Time (in seconds) from "K" point to .75a
b - Minimum gap at rebound (≥ .75a)

23) Overtravel Stop Bolts

With the breaker open and closing spring discharged remove the locknut on the overtravel stop bolt and use a screwdriver to back the stop bolt out of the horizontal bar. Insert the new stop bolt until it touches the bottom of the opening stop block, and back out ¼ to ½ turn. Install locknut and torque to 20 to 25 ft-lbs.

24) Opening Stop Bolt and Horizontal Connecting Bar

In order to replace the opening stop bolt it is necessary to remove the horizontal connecting bar. To remove the horizontal connecting bar, gag the opening spring by first charging and gagging the close spring, pushing the manual close button and pulling the slow close pin. Slow close the breaker by turning the manual drive clutch until the opening spring is compressed to the point that gag can be inserted. Do not fully close the breaker since this will result in fully charging the opening spring which could shear the gag when the breaker is tripped. Trip the breaker after the opening spring gag is inserted.

Remove the pin retaining rings from the three pins connecting the horizontal connecting bar to breaker bell cranks. Remove the three bolts holding the stop bolt bracket *(Figure 29, a)* to the breaker side frame. Remove the opening stop bolt from the horizontal connecting bar by backing off the locknut *(Figure 29, b)* and unscrewing the opening bolt stop *(Figure 29, c)*.

Figure 29 Opening Bolt Stop

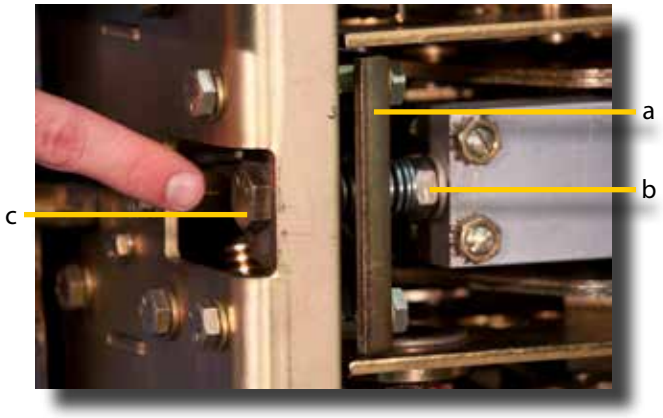

a. Stop Bolt Bracket
b. Locknut
c. Opening Stop Bolt

Install new opening stop bolt and reinstall the horizontal connecting bar. Turn the manual wind clutch until the close spring is in the charged position (and trip latch reset). Push the manual close button and pull the slow close pin on the flywheel. Slow close the breaker and remove the gag from the opening spring. Charge the closing spring and remove the closing spring gag. Push the manual close button and the manual trip button to discharge the closing spring and open the breaker.

Check and adjust the trip latch clearance, the overtravel stop bolts and the wipe and gap.

25) Toggle Pin

The toggle pin *(Figure 30, d)* may be replaced by removing the retaining ring on the end of the pin nearest the front of the breaker mechanism and pulling the pin out of the toggle linkage toward the back of the breaker mechanism. This must be done with the breaker open and the closing spring charged and gagged. Retain the spacers *(Figure 30, b)* for reuse.

After the toggle pin has been replaced check the pull rod adjustment.

Figure 30 Toggle Pin and Trip Roller

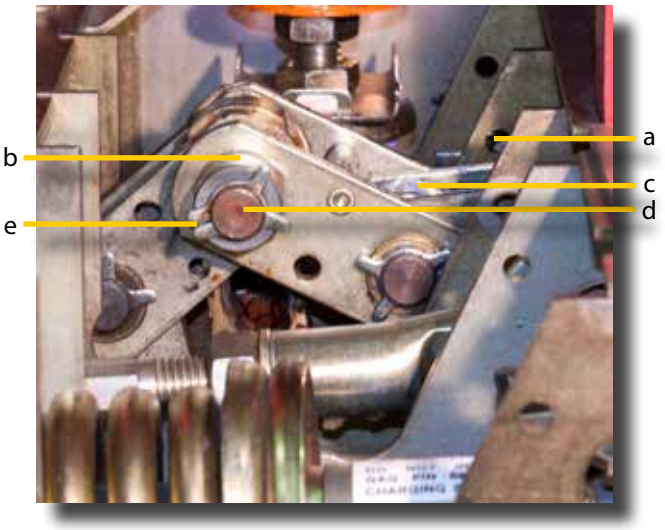

a. Toggle Positioning Pin
b. Spacer
c. Trip Roller
d. Toggle Pin
e. Pin Retaining Ring

26) Trip Roller

The trip roller *(Figure 30, c)* may be replaced by first removing the toggle pin and then removing the toggle positioning pin *(Figure 30, a)*. Remove the pin retaining ring nearest the front of the breaker mechanism on the pin which mounts the trip roller to the toggle linkage. Pull the pin toward the rear of the breaker mechanism, until the trip roller can be removed.

After reassembly check the pull rod adjustment and trip latch clearance as described in *Ch 5 Mechanical Checks and Adjustments, C. Pull Rod Adjustment* **AND** *D. Trip Latch Clearance*.

27) Close Roller

Charge and gag the closing spring. Press the manual close button to release the flywheel. Rotate the flywheel by hand to position the close roller *(Figure 31, d)* near the bottom of the mechanism. Remove the outboard retaining ring and then remove the pin which mounts the close roller to the flywheel.

Figure 31 Close Roller

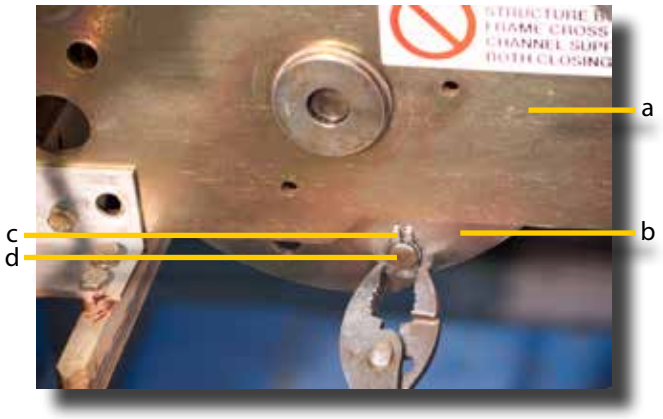

a. Breaker Frame
b. Flywheel
c. Pin Retaining Ring
d. Close Roller Pin

28) Trip Shaft Assembly (forward)

Remove the front angle plate and the phase one (left side as you are facing the front of the breaker) interrupter assembly. With the breaker open and the closing spring charged and gagged, use end cutting nippers to cut the clamp which retains the trip shaft drive pin. Remove the trip shaft drive pin and the trip coil. Observe the position of the trip shaft torsion spring *(Figure 32, b)* to assure that it is positioned the same way when the trip shaft assembly is replaced. Remove the two bolts which mount the bracket *(Figure 32, e)* to the mechanism frame.

After reassembly check that the breaker operates electrically as well as manually.

Figure 32 Trip Shaft (forward) Removal

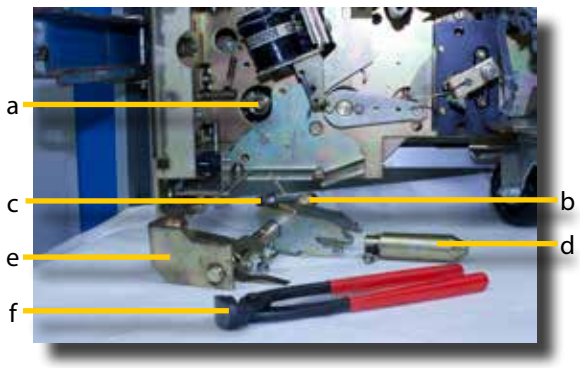

a. Trip Shaft Rear
b. Torsion Spring
c. Drive Pin
d. Trip Coil Plunger
e. Mounting Bracket
f. End Cutting Nippers (for clamp removal)

29) Close Shaft Assembly (forward)

Remove the front angle plate and the phase 3 (right side facing breaker) interrupter assembly. With the breaker open and the closing spring discharged, use end cutting nippers to cut the clamp which retains the close shaft drive pin. Remove the drive pin *(Figure 33, d)*. Disconnect the charge/discharge mechanism spring. Remove the close coil and maneuver the shaft out through the front of the breaker.

Figure 33 Close Shaft (forward) Removal

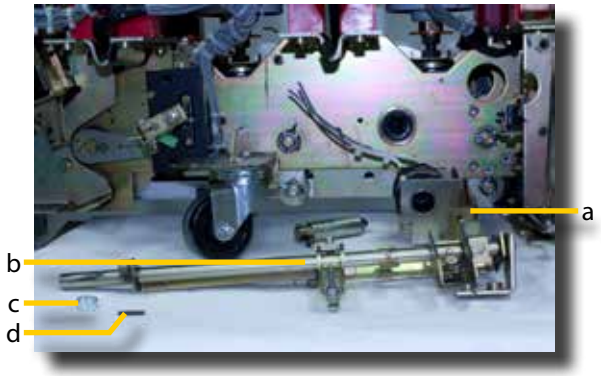

a. Close Coil Mounting Bracket
b. Close Shaft (forward)
c. Clamp
d. Drive Pin

30) Close Shaft (rear)

To remove the close latch remove the rear frame of the breaker mechanism and the phase 3 (right side facing front of breaker) interrupter assembly. Extend the secondary disconnect handle before removing the rear frame.

CAUTION

The closing spring should be charged, gagged and the manual close button pushed before the rear frame is removed.

The rear frame contains a bearing which supports the rear end of the flywheel. Remove the rear frame carefully so as not to pull the forward end of the flywheel from its support. Cut the clamp *(Figure 34, a)* that retains the pin connecting the front and rear section of the close shaft using end cutting nippers. Observe the position of the closing shaft torsion spring *(Figure 34, b)* so that it can be installed in the same location.

Figure 34 Close Shaft (rear)

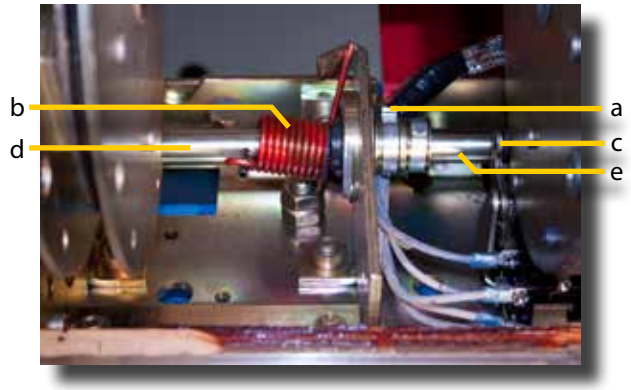

a. Clamp
b. Torsion Spring
c. Gear motor Limit Switch Operator
d. Close Shaft (rear)
e. Close Shaft (forward)

31) Closing Spring

CAUTION

Do not remove the gag pin from the new closing spring assembly until it has been installed in the breaker. The charged closing spring contains very high energy which could result in severe injury if released in an uncontrolled manner.

a. Spring Assembly is Functional Can be Gagged

To remove the closing spring charge and gag it and push the manual close push button. Push the manual trip push button to assure that the breaker is open. Disconnect the closing spring assembly *(Figure 26, d)* by driving the roll pin out that connects the closing spring assembly to the flywheel block. The closing spring can then be removed through the bottom of the breaker.

b. Spring Assembly is Damaged and Cannot be Gagged

The closing spring can be removed by driving out the roll pin that connects the closing spring shaft to the flywheel block and then removing the left rear wheel assembly and the closing spring gag interlock on the left side frame.

CAUTION

These operations must be performed with the closing spring discharged.

The end of the closing spring opposite the flywheel can then be forced down from the breaker frame and the closing spring shaft pulled out of the flywheel block.

CAUTION

There is some compression remaining in the closing spring even though it is discharged. Use a long bar to force the spring assembly away from the frame and do not stand directly in line with the direction of the spring force since some energy will be released when the spring clears the frame.

32) Flywheel Assembly

Remove the closing spring and the pull rod. Remove the flywheel brake. Remove the pin retaining ring on the rear close shaft. Remove the spring for the closing spring gag interlock from the rear frame. Extend the secondary disconnect handle and remove the bolts which hold the rear frame to the mechanism frame. Carefully pull the rear frame away from the mechanism. Rotate the closing shaft to a position where it does not interfere with the flywheel and carefully slide the flywheel assembly out of the mechanism.

When reassembling, lift the gear motor limit switch actuator *(Figure 34, c)* before sliding the flywheel assembly into place. After reassembly perform a complete adjustment of the mechanism as described in *Ch 5 Mechanical Checks and Adjustments*, and then operate the breaker electrically several times before returning the breaker to service.

33) Spring Discharge Interlock

With the breaker open and the closing spring discharged, remove the two bolts *(Figure 35, b)* which mount the spring discharge interlock to the right side frame of the breaker. Remove the spring discharge interlock.

On reassembly, check the adjustment of the close latch monitor switch.

⚠ CAUTION

The metal-clad switchgear must be deenergized prior to performing the following test.

Check that the spring discharge interlock performs its function by performing the interface test with the metal-clad switchgear as described in GEK-39672.

Figure 35 Spring Discharge Interlock

a. Spring Discharge Interlock
b. Mounting Bolts

Note: *Shown with close coil, close shaft, and 52CL/MS (close latch monitor switch) removed.*

34) Negative Interlock

With the breaker open and the closing spring discharged, remove the two bolts *(Figure 36, e)* holding the interlock to the left side frame of the breaker and the two bolts to the trip coil mounting frame. Remove the latch checking switch (52LCS) and the negative interlock return spring. Slide the negative interlock out through the bottom of the mechanism frame.

On reassembly, check the adjustment of the latch checking switch (52LCS).

⚠ CAUTION

The metal-clad switchgear must be deenergized prior to performing the following test.

Perform the interface test with the metal-clad switchgear as described in GEK-39672.

35) Redundant Negative Interlock

Remove the redundant negative interlock return spring *(Figure 36, a)* and the two bolts holding the interlock *(Figure 36, e)* to the mechanism frame. Slide the interlock out through the bottom of the breaker.

⚠ CAUTION

The metal-clad switchgear must be deenergized prior to performing the following test.

Figure 36 Negative and Redundant Negative Interlock

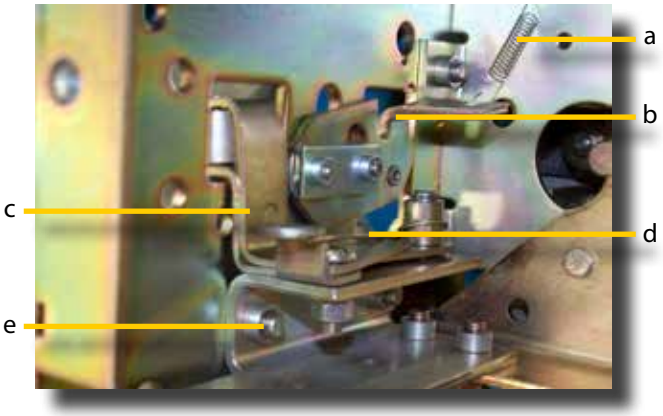

a. Redundant Negative Interlock Return Spring
b. Redundant Negative Interlock
c. Negative Interlock
d. Negative Interlock Return Spring
e. Mounting Bolt

On reassembly perform the interface test as described in GEK-39672. Since the negative interlock operates at nearly the same time as the redundant negative interlock it will be difficult to determine which of the two interlocks cause actuation of the breaker trip shaft. Use a flash light and watch the action of the redundant negative interlock roller as the breaker is racked into and out of the connected position to assure that it is operating correctly to actuate the trip shaft if the negative interlock was not operating.

36) Closing Spring Gag Interlock

With the closing spring discharged, remove the closing spring gag interlock return spring *(Figure 37, f)* and the retaining ring that holds the interlock lever to the closing spring bracket. Remove the closing spring gag interlock by lifting it from the pin in the closing spring bracket.

After reinstallation of the closing spring gag interlock, check that it interferes with the rail of the breaker lift truck when the closing spring is gagged.

⚠ CAUTION

Do not attempt to gag the closing spring except when it is charged.

37) Rackout Arm Assembly - Standard

Remove the two bolts holding the rackout arm *(Figure 2, e)* to the breaker frame. Remove the two bolts holding the rackout arm angle bracket to the front angle plate. No adjustments required after reinstalling.

38) Rackout Arm Assembly - Seismic

The rackout arms for seismic breakers are similar to the standard rackout arms except that the support bracket is adjustable. The adjustment is made using a 7/8" open end wrench to turn an eccentric under the support bracket. The support bracket should be adjusted so that the distance between the support bracket and the short vertical section on the rackout arm is 1.000 + .030-.000 inches. This allows the rackout arm to engage the racking block on the racking mechanism installed in the equipment and limit the front to back freedom of the breaker.

After the rackout arm has been installed insert the breaker into the test position in the equipment and check that the rackout arm engages the racking block and that there is .030 inch maximum front to back freedom of movement.

Figure 37 Closing Spring Gag Interlock

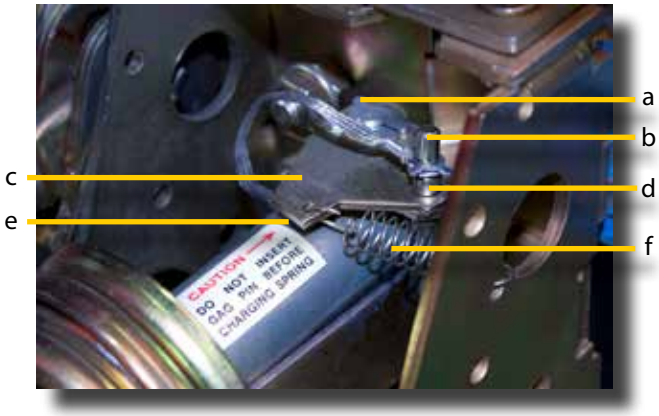

a. Retaining Ring
b. Close Spring Blocking Pin
c. Close Spring Interlock Lever
d. Storage Hole
e. Blocking Hole (under lever)
f. Interlock Lever Return Spring

Ch 9 Power/Vac® Direct Acting Undervoltage Trip Device

A. Introduction

This section is applicable to Power/Vac circuit breaker containing a direct acting undervoltage trip device and provides instruction and explanations which are in addition to those of the previous chapters in this manual.

The undervoltage trip device is a factory installed unit which is an integral part of the circuit breaker mechanism. It's function is to monitor the trip control voltage and to trip the circuit breaker if that control voltage is lost.

B. Safety

All safety precautions contained in the main body of this instruction bulletin apply. Special emphasis should be placed on the prohibition against working on the breaker with the test coupler engaged. When it is necessary to work on a closed breaker, the undervoltage trip device should be gagged rather than applying voltage to the device to permit the breaker to close.

C. Shipping Position

The Power/Vac circuit breaker is shipped from the factory with the undervoltage trip device gag bolt installed in the gag (up) position to allow the breaker to be shipped in the closed position. This bolt should be kept in the gagged position during mechanical check-out of and maintenance on the breaker.

CAUTION

Back the gag bolt to its down (ungagged) position before placing the breaker in service. If this is not done, the breaker will operate as if the undervoltage trip device was not installed. Back the gag bolt down only when the breaker is in the tripped (open) position.

D. Description and Principle of Operation

The undervoltage trip device is a spring actuated tripping mechanism which monitors the trip control voltage. It is actuated by loss of that voltage, which then causes it to trip the breaker. *Figure 38* shows the front and rear view of the device. In the following description, clockwise and counterclockwise rotation refer to the direction of rotation i the front view. When observing the rear view, the opposite rotation occurs.

With the breaker closed, the solenoid *(Figure 38, b)*, energized by the breaker trip control voltage, holds hammer assembly *(Figure 38, c)*, in its UP (counterclockwise) position with adjusting spring *(Figure 38, d)*, in compression. On loss of voltage to the solenoid the force on the hammer assembly is unbalanced and the adjusting spring accelerates the hammer assembly clockwise around its pivot pin *(Figure 38, n)*. The striker bolt *(Figure 38, e)* on the hammer assembly, strikes the primary sear *(Figure 38, p)* which is rotated clockwise releasing intermediate sear *(Figure 38, g)* which rotates counterclockwise to release striker assembly *(Figure 38, h)*. The tension in the striker spring *(Figure 38, i)* drives the striker assembly clockwise. The lower tang of the striker assembly strikes a pin in the breaker trip shaft which causes the trip shaft to rotate and trip the breaker.

Figure 38 Undervoltage Trip Device

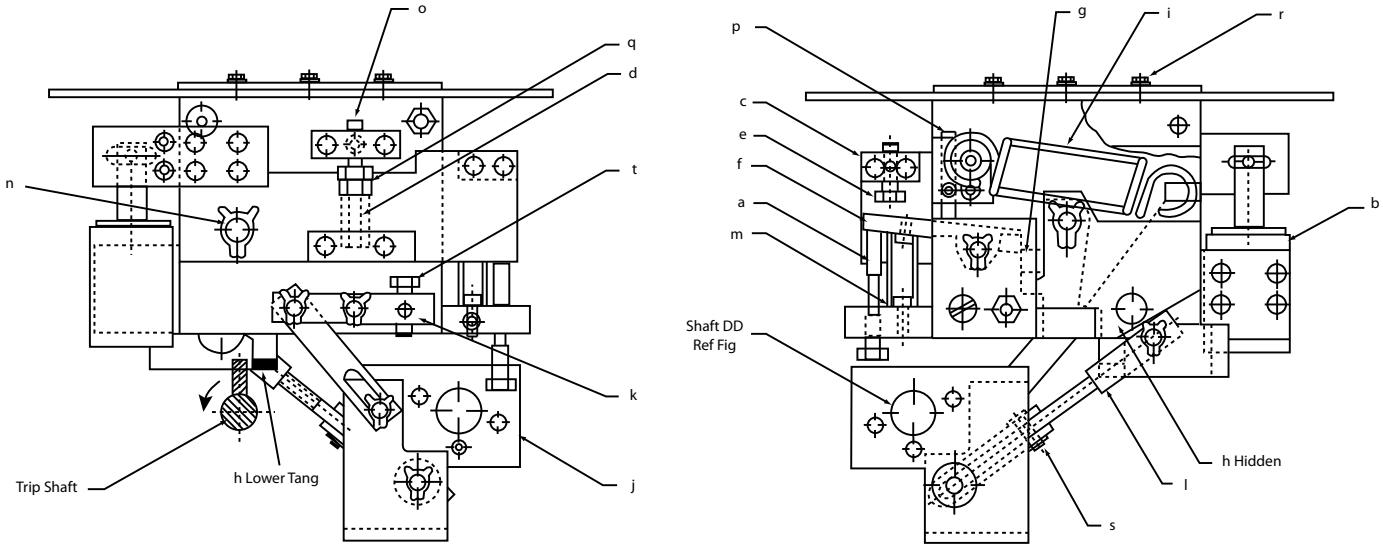

Front View

Rear View

a. Gag Bolt
b. Solenoid
c. Hammer Assembly
d. Adjusting Spring
e. Striker Bolt
f. Primary Sear
g. Intermediate Sear
h. Striker Assembly
i. Striker Spring
j. Reset Bellcrank
k. Reset Lever Assembly
l. Pull Rod Assembly
m. Sear Spring
n. Hammer Assembly Pivot
o. Hammer Assembly Reset Position Screw
p. Primary Sear Engagement Screw
q. Spring Adjustment Nut
r. Mounting Screws
s. Connecting Pin
t. Reset Bolt

Note: *For breakers equipped with this option, the undervoltage trip device is located above and behind the trip coil as facing the front of the breaker.*

Figure 39 Typical Wiring Diagram for ML-17 Mechanism with Direct Acting Undervoltage Trip Device (52/UVD)

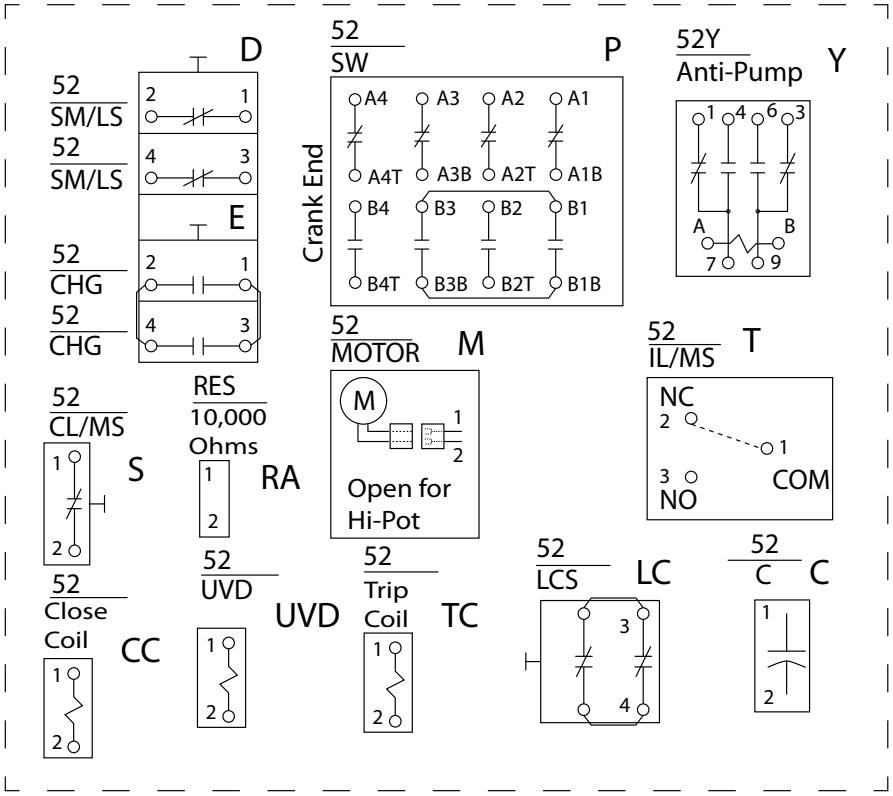

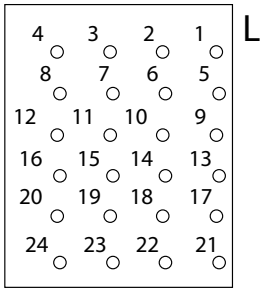

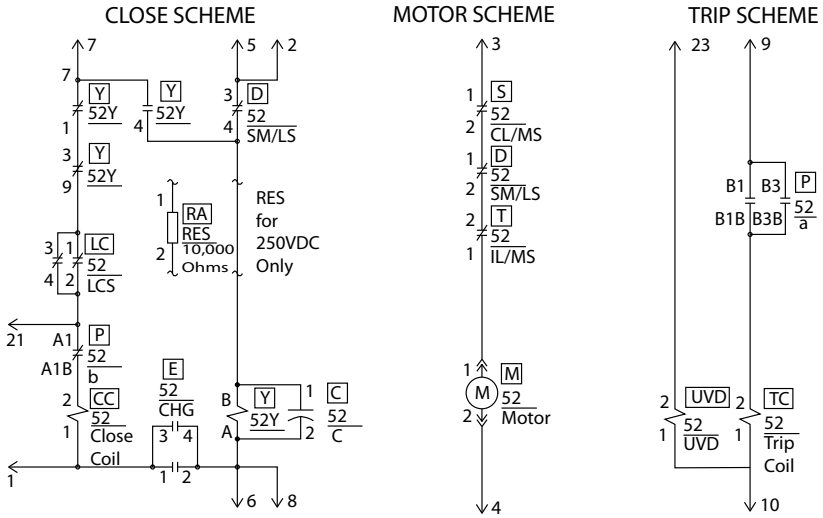

Switch	Type
52 CL/MS	N/O
52 SM/LS	N/O
52 CHG	N/C
52 LCS	N/O
52 IL/MS	N/C

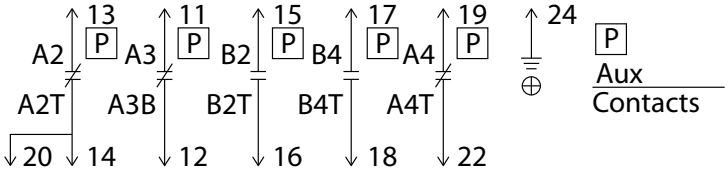

Closing Circuit Voltate	Resistor
48VDC	None
125VDC	None
250VDC	10,000 Ohms
120VAC	None
240VAC	None

As the breaker opens the breaker output shaft rotates counterclockwise. The reset bellcrank *(Figure 38, j)* mounted on the breaker output shaft, rotates causing two functions to occur simultaneously: (1) the hammer assembly is reset (solenoid retracted position) by the motion of the reset lever assembly *(Figure 38, k)*; and (2) the striker spring is cocked by the pullrod assembly *(Figure 38, l)*. As the striker spring is pulled to its cocked position, the primary and intermediate sears are reset by the sear spring *(Figure 38, m)*.

In this position (breaker is open and undervoltage trip device is cocked) the device is set to perform its function when the breaker is reclosed. If trip control voltage is restored to the solenoid before the breaker is closed, the hammer assembly will remain in its counterclockwise location and the breaker will close normally. However, if the trip control voltage has not been restored, the solenoid will not hold the hammer assembly in its retracted position as the reset level assembly *(Figure 38, k)* moves away during the closing stroke of the breaker. The hammer assembly will then drop causing the trip sequence to repeat.

The undervoltage trip device is equipped with a gag bolt to allow the breaker to be operated when trip control voltage is not available. This feature is required for performing maintenance on the breaker or for mechanical check out of the breaker.

The gag bolt *(Figure 38, a)* identified by a red shank, may be installed in the UP position where it contacts the primary sear and prevents it from releasing when struck by the hammer assembly. This bolt must be backed out to its DOWN position before the breaker is placed in service in order for the device to perform its function.

CAUTION

Gag or ungag the device only when the breaker is in the tripped (open) position and the closing spring discharged or gagged.

E. Removing or Installing Gag Bolt

The gag bolt *(Figure 38, a)* has a red shank and is accessible from the bottom side of the breaker. Access may be obtained by tipping the breaker gently on its side.

⚠ CAUTION

Do not work under a breaker suspended by the breaker lift truck.

Before tipping a breaker on its side, ensure that it is open and discharged. If this is not done, the interlock roller on the side of the breaker may cause the mechanism to operate.

Gag or ungag the device only when the breaker is open and the closing spring discharged or gagged.

Perform the following to gag or ungag the device:

1. Check that the breaker closing spring is discharged or gagged and that the breaker is tripped (open).
2. Either tip the breaker on its side or raise the breaker to gain access to the gag bolt.
3. To gag the device, screw the bolt to its UP position until it contacts the bottom of the primary sear.
4. To ungag the device back the gag bolt out to its DOWN position. In this position no threads on the gag bolt will be engaged.

F. Electrical Checks

A typical wiring diagram is shown in *Figure 39* for a Power/Vac® breaker containing an undervoltage trip device. Check the wiring diagram supplied with the actual circuit breaker for its wiring.

Electrical checking consists of testing to see that the breaker will close when nominal trip control voltage is applied and that a closed breaker will trip when that voltage is removed.

Note: *The device gag bolt must be in the DOWN (ungagged) position while performing the electrical tests.*

1) Closing

Use a test connector or the test position in the metal-clad switchgear to apply nominal trip control voltage across the device solenoid. Close the breaker either electrically or manually and check that the breaker closed and stayed closed.

2) Tripping

Remove the trip control voltage. The breaker should trip immediately.

Note: *If performing the test in the metal-clad switchgear, trip control voltage may be removed by pulling the trip fuse.*

G. Mechanical Adjustments

There are five adjustments required for proper functioning of the undervoltage trip device. These are:

1. Hammer Assembly Reset Position
2. Drop Out Voltage
3. Position with Respect to Trip Shaft
4. Pullrod Adjustment
5. Solenoid Reset

Each of these adjustments has been set at the factory and should be readjusted only if there is a malfunction or if the device has been removed from the breaker. To gain access to the device to perform these adjustments, it is necessary to remove the breaker front angle plate and the trip coil.

1) Hammer Assembly Reset Position

The hammer assembly reset position screw *(Figure 38, o)* is adjusted to allow the solenoid plunger to fully engage the solenoid. Loosen the set screw which locks position screw in position and using a screwdriver through the hole in the top plate of the device, adjust the reset position screw until it just contacts the plate on the hammer assembly when the solenoid if fully retracted (hammer assembly in the full counterclockwise position). Back the reset position screw out 1/8 turn to assure full engagement of the solenoid. Lock in position by tightening the set screw.

2) *Drop Out Voltage*

The drop out voltage is adjusted by the amount of compression of the adjusting spring *(Figure 38, d)*. Increasing the compression on the spring increases the voltage at which "drop out occurs" (it also increases the minimum voltage for the device to reset, i.e. for the solenoid to hold when the breaker is closed). The adjusting spring provides the energy to accelerate the hammer assembly to trip the device and therefore must be compressed when the device is charged. It is recommended that the spring adjustment nut *(Figure 38, q)* be set to cause the device to trip when the voltage is 15 to 20% of the nominal trip control voltage. After this adjustment has been made and after the device is reinstalled in the breaker and all other adjustments completed, set the trip control voltage to 85% nominal and check that the breaker will close and stay closed. If the breaker trips (i.e. fails to stay closed), decrease the compression on the adjusting spring until the unbalanced force between the solenoid and the adjusting spring is such that the solenoid stays reset during the closing operation of the breaker.

3) *Device Position*

The position of the undervoltage trip device relative to the breaker trip shaft may be adjusted only when the pullrod assembly *(Figure 38, l)* and the reset lever assembly *(Figure 38, k)* are disconnected. To disconnect the pullrod, gag the undervoltage trip device and slow close the breaker to remove the tension from the pullrod. The pullrod connecting pin *(Figure 38, s)* may then be removed by first removing the cotter pin which holds it in place. The reset lever assembly may be disconnected by removing the pin retaining ring which holds it in position.

The clearance between the lower tang on the striker assembly *(Figure 38, h)* and the trip shaft pin should be set at .040 to .120 inch.

The position adjustment is made by loosening the three mounting screws *(Figure 38, r)* and positioning the device to its proper location. Retighten the mounting screws to lock the device in place.

4) *Pullrod Adjustment*

The pullrod *(Figure 38, l)* transfers the motion of the reset bellcrank *(Figure 38, j)* to the striker assembly to charge the striker spring.

With the undervoltage device charged and gagged and the breaker tripped (open), adjust the two ends of the pullrod to the point that the holes for the connecting pin are aligned. Screw the threaded end in two and one half turns further to provide overtravel to the striker assembly. Slow close the breaker and connect the two halves with the connecting pin and secure with a cotter pin. Trip the breaker and back the device gag bolt down to its ungagged position and check that the primary sear *(Figure 38, f)*. moves freely to its full reset position and that it will move easily using light finger pressure. If the primary sear does not reset completely, readjust the pullrod using an additional one half turn of engagement.

5) Solenoid Reset

The reset lever assembly repositions the hammer assembly to reset the solenoid when the breaker is tripped. The reset bolt *(Figure 38, t)* is to be adjusted to fully reset the solenoid when the breaker is tripped. Loosen the set screw which holds the reset bolt in position and adjust the reset bolt to hold the hammer assembly to within .005 inch of its full counterclockwise position. Lock the reset bolt in place by tightening its set screw.

H. Removal and Replacement of the Undervoltage Trip Device

CAUTION

Refer to** Ch 5 Mechanical Checks and Adjustments, B. Slow Closing Operation **prior to gagging the closing spring or slow closing the breaker. Refer to** Ch 5 Mechanical Checks and Adjustments, H. Control Coil Plunger Travel **for removal and replacement of the interrupter assembly.

1) Removal

With the breaker open and the closing spring charged and gagged, remove the breaker front cover and the front angle plate. Remove the phase 1 interrupter assembly. Remove the breaker trip coil from its mounting bracket. Gag the undervoltage trip device by turning the gag bolt to its "up" position. Disconnect and remove the reset lever assembly from the bell crank and the pivot on the device by removing the pin retainers.

Slow close the breaker to remove the tension from the striker spring and the pullrod assembly. Disconnect the pullrod by removing the connecting pin which is retained with a cotter pin.

Trip the breaker by pushing the negative interlock roller. Disconnect the solenoid leads from the terminal block. Remove the three bolts mounting the device to the breaker frame and maneuver it out through the front of the breaker.

2) Replacement

With the breaker open (tripped) and the closing spring charged and gagged, maneuver the device into position so that the mounting holes are aligned with the three mounting holes in the breaker frame. Mount the device so that the distance between the breaker trip shaft and the lower tang of the striker assembly is .040 to .120 inch. Mounting screws may be loosened if required to obtain this adjustment. Tighten the mounting screws to lock the device in place.

Set the pullrod adjustment as described in *Ch 9 Power/Vac® Direct Acting Undervoltage Trip Device, G. Mechanical Adjustments, 4) Pullrod Adjustment*. After the pullrod is adjusted trip the breaker.

Reinstall the reset lever assembly. It may be necessary to turn the reset bolt in a few turns to fit the new device. Hold the hammer assembly in its up position when installing the reset lever. Adjust the reset bolt as described in *Ch 9 Power/Vac Direct Acting Undervoltage Trip Device, G. Mechanical Adjustments, 5) Solenoid Reset*.

Connect the solenoid leads and check the drop out voltage as described in *Ch 9 Power/Vac® Direct Acting Undervoltage Trip Device, G. Mechanical Adjustments, 2) Drop Out Voltage*.

Reinstall the phase 1 interrupter assembly.

I. Lubrication

Proper lubrication is important for maintaining reliable operation of the undervoltage trip device. When maintenance is performed on the Power/Vac breaker apply a few drops of synthetic oil such as Mobil #1 at each pivot pin and to each moving contact surface.

POWELL

01.4IB.66000E
Power/Vac® Vacuum Circuit Breaker

Equipped with ML-17 or ML-17H Mechanism

August 2022

Powell Electrical Systems, Inc.
Service Division - Houston
7232 Airport Blvd • Houston, TX • 77061

Powered by Safety®

©2006 Powell Industries, Inc. • All rights reserved.

Tel: 1.800.480.7273
powellind.com
info@powellind.com